ANALYSIS OF SOLAR CAR STEERING TIE ROD USING NUMERICAL AND THEORETICAL APPROACH WITHDIFFERENT MATERIALS

[1]THIN ZAR THEIN HLAING, [2]HTAY HTAY WIN, [3]MYINT THEIN

[1,2]Departmentof Mechanical Engineering, Mandalay Technological University, Mandalay, Myanmar
Email: [1]thinzarzar88@gmail.com, [2]htayhtayw@gmail.com, [3]minmyintthein2008@gmail.com

Abstract: A car's steering wheel is connected to the steering gear and which is connected to the wheels via the tie rod. The job of the tie rod is to ensure the wheels are aligned. It provides the adjustment for wheel alignment that keeps the tires from wearing out on the inner and outer edges. Hence the functioning of tie rod is crucial for steering as well as suspension performance of vehicle. Tie rods are an integral part of vehicle's steering system. Tie rod may get fail due to varying forces and bumping of vehicle during steering. The forces from the steering are also considered during the static condition of car. Vibration and buckling of tie rod has been continuously a concern which may lead to structural failure. So research work is aimed to assess buckling strength and compare buckling load of tie rod for different materials. Finite element models of the tie rod also analyzed to obtain stress distributions in each component. Based on the theoretical calculation results and finite element analysis with ANSYS results, stress values are validated. The mode shape and natural frequency results for different materials obtained in the normal modal analysis are compared. In buckling analysis, the load factor obtained for different materials are compared and critical buckling load is calculated and is validated by theoretical calculations.

Keywords: ANSYS Software, Buckling Analysis, Modal Analysis, Stress Analysis, Steering Tie Rod.

I. INTRODUCTION

Tie rod is the part of steering system of an automobile. Tie rod is slender in structure and used to tie and sustain compressive and tensile loads. The primary function of tie rod is to transfer the motion from steering arm to steering knuckle. Though maximum weight of vehicle is sustained by the suspension system, Fluctuating forces and vibration due to bumps form automobile vehicle transmits to tie rod which may cause it to fail. The most percentage of forces on tie rod is compressive. Structural failure also takes place due to high severity of vibration and forces. Force required in static condition of passenger bus is more as compared to moving bus. [6]

Form the several years a great deal of research work has been invested to find out the critical buckling loads of columns. Theoretical and experimental research has predicted that geometrical imperfections and modified boundary conditions greatly influence the critical buckling load magnitudes and scatter of columns.

A tie rod contains such geometrical imperfections and modified boundary conditions from a perfect cylindrical rod, since a tie rod consists of outer and inner ends threaded into a middle rod body, with changingend conditions. So it is important to accurately find out the buckling loads of tie rods, especially ones that are critical in compression used in automobile industries and aeronautical industry.

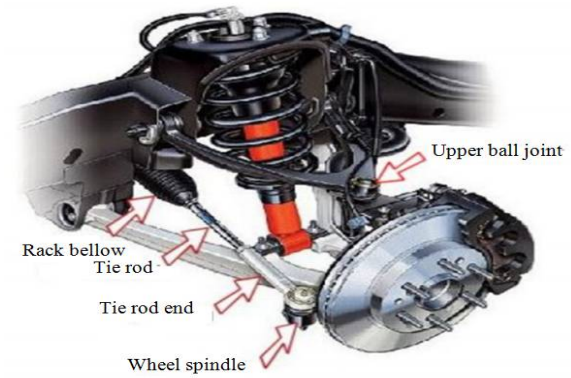

Fig.1.Location of steering tie rod [6]

II. DESIGN PROCEDURE OF STEERING TIE ROD

At first the theoretical study of tie rod is done. To design the steering tie rod for solar car need to consider the overall weight of the solar car.

2.1. Specification Data of Solar Car

The parameter of solar car must be known to design of steering system. The parameters considered for design the solar car is shown in **Table 1**.

Table 1: Design Parameter for Solar Car

Technical category	Dimension	Unit
Overall length of frame	2.209	m
Width of frame	1.067	m
Height of frame	1.803	m
Front track width	0.87	m
Rear track width	0.98	m
Wheel base	1.676	m
Vehicle speed	35	km/hr
Vehicle gross weight	490	kg
Solar panel weight	46	kg
Total weight of solar car	536	kg
6V,185AH Batteries	4	batteries
Motor power	3	kW

The design procedure of the steering system involves the following three steps:

1) Weight Distribution on Solar Car

MicrosoftExcel is used to calculate the resulting center of gravity of the sprung andunsprungmass. This determines the static weight distribution of the car. The results are shown in **Table 2** below: [3]

Table 2: Static Mass Distribution on Solar Car

		Mass (kg)	X-coordinate (m)	Z-coordinate (m)
1	Both Front wheels	10	0	0.228
2	Steering Gear	5	0.1	0.3
3	Suspension System(Front)	7	0.3	0.1786
4	Steering Wheel	1	0.7247	1.0326
5	Two Persons	120	0.9747	0.9096
6	Three Batteries (Front)	84	0.9457	0.4301
7	Three Batteries (Rear)	84	1.0767	0.4301
8	Motor	24	1.676	0.4346
9	Differential	50	1.676	0.2286
10	Both Rear Wheels	10	1.676	0.2286
11	Suspension System(Rear)	7	1.028	0.1786
12	Solar panel	46	1.028	1.1665
13	Chassis and smallcomponent	88	1.117	0.361
			$\bar{X}=\frac{\sum mX}{\sum m}$ =1.094	$\bar{Z}=\frac{\sum mZ}{\sum m}$ = 0.56

The static mass distribution on the wheels is calculated by taking into account all of the cars parts. All mass centers are drawn below with their coordinates in **Fig.2**.

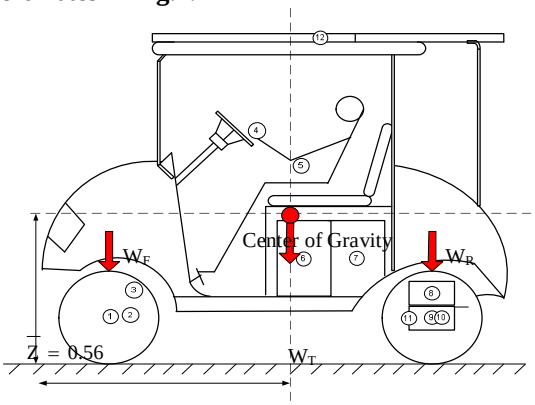

Fig.2.Weight distribution on solar car

Calculate the weight distribution on front and rear tire by using these equations. [1]

$$W_F = \frac{W_T \times a_2}{L} \quad (1)$$

$$W_R = W_T\left(1-\frac{a_2}{L}\right) \quad (2)$$

The forces are calculated with the total weight of 536 kg including all parts, driver and panel weight. Further a weight distribution on front and rear tire have been calculated by Equation 1 and 2. The weight distribution on each tire is shown in **Table 3**.

Table 3: The Weight Distribution on Rear and Front Wheel

Tire	Weight (kg)	Force (N)	%of Total (Weight)
Both front	150.71	1478.465	28.1%
Left /Right front	75.355	739.233	14.05%
Both rear	385.29	3779.685	71.9%
Left /Right rear	192.645	1889.847	35.95%
Total	536	5258.16	100%

2) Calculation of Acting Forces on the Steering System

There are different forces occurring on the manual steering systems:

i. Cornering forces
ii. Accelerating forces
iii. Braking forces
iv. Bump force

Calculate the acting force on the steering system by using these equations. [2]

i. Cornering forces

$$F_{N-i,o} = F_{N-i,o} \mp \frac{Fh_{cg}}{front\ \ track\ \ width} \quad (3)$$

$$F_{lat} = \mu F_N \quad (4)$$

ii. Accelerating forces

$$F_{N-f,r} = \frac{1}{2}mg\frac{a_2}{L} \mp \frac{1}{2}mg\frac{h_{cg}}{L}\frac{a}{g} \quad (5)$$

$$F_A = \mu F_N \quad (6)$$

iii. Braking forces

$$F_{N-f,r} = \frac{1}{2}mg\frac{a_2}{L} \pm \frac{1}{2}mg\frac{h_{cg}}{L}\frac{D}{g} \quad (7)$$

$$F_B = \mu F_N \quad (8)$$

iv. Bump forces

$$F_{Bump} = \frac{3mg}{2} \quad (9)$$

The result data of acting forces on the steering system is shown in **Table 4**.

Table 4: Acting Force on the Steering System

	Cornering& Bump Force (N)	Accelerating & Bump Force (N)	Breaking & Bump Force (N)
Front Wheel	4810.98	4008.57	4765.75
Rear Wheel	5929.54	5393.55	4685.96

When cornering, the steering system connected at front wheel. Therefore, the value of maximum cornering and bump force was 4810.98 N.

3) Calculation for Steering Tie Rod

The tie rod connects the steering arm to the rack. The rack is under compression and tension. The most

probable mode of failure is buckling; therefore the design against buckling is essential. The portions of the tie rod are shown in **Fig.3**. Parameter and specification data of tie rod are shown in **Table 5.**

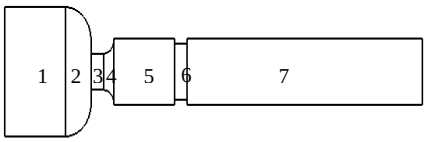

Tab

Technical category	Dimension	Unit
L_1	14	mm
L_2	10	mm
L_3	6	mm
L_4	5	mm
L_5	24	mm
L_6	5	mm
L_7	93	mm
D_1	39	mm
D_5	19	mm
D_6	16	mm
D_7	19	mm

Table 6: Specification Data for Tie Rod

Technical category	Dimension	Unit
Material properties (Carbon steel)		
Yield strength	248	MPa
Elastic Modulus	200000	MPa
Factor of safety	1.5	-
Imperfection factor,β	0.34	
Partial safety factor,γ_{M1}	1.1	

The tie rod was designed to resist buckling and is made of Carbon steel. The design equations for tie rod are; [4]

The critical load:

$$P_{cr} = \text{Acting force} \times F.S \quad (10)$$

Rankine formula:

$$D_3 = \sqrt{\frac{P_{cr}\left(1+\left(\frac{L}{K}\right)^2\right)}{\frac{\pi}{4}\sigma_y}} \quad (11)$$

Radii of gyration:

$$i = \sqrt{\frac{I}{A}} \quad (12)$$

Non –dimensional slenderness:

$$\lambda = \frac{L}{i} \quad (13)$$

$$\lambda_1 = \pi\sqrt{\frac{E}{f_y}} \quad (14)$$

$$\bar{\lambda} = \frac{\lambda}{\lambda_1} \quad (15)$$

Hollow section, cold formed,

$$\varphi = 0.5 \times [1 + \beta(\bar{\lambda} - 0.2) + \bar{\lambda}^2] \quad (16)$$

Reduction factor:

$$X = \frac{1}{\varphi + \sqrt{\varphi^2 - \bar{\lambda}^2}} \quad (17)$$

Bucking resistance:

$$N_{b,Rd} = \frac{X \times A \times f_y}{\gamma_{M1}} \quad (18)$$

$$N_{Ed} = F_s \times F.S \quad (19)$$

The criteria to resistance buckling:

$$\frac{N_{Ed}}{N_{b,Rd}} \le 1 \quad (20)$$

Equivalent (von-Mises) Stress:

$$\sigma_v^{\,2} = \frac{1}{2}\left[(\sigma_1 - \sigma_2)^2 + (\sigma_2 - \sigma_3)^2 + (\sigma_3 - \sigma_1)^2\right] \quad (21)$$

Total Deformation:

$$\delta_L = \frac{FL_1}{A_1E} + \frac{FL_2}{A_2E} + \frac{FL_3}{A_3E} + \frac{FL_4}{A_4E} + \frac{FL_5}{A_5E} + \frac{FL_6}{A_6E} + \frac{FL_7}{A_7E} \quad (22)$$

Table 7: Result Data for Tie Rod

Technical category	Dimension	Unit
Diameter of necking, D_3	11	mm
Criteria to resistance buckling, $\frac{N_{Ed}}{N_{b,Rd}}$	0.849	-
Equivalent von-Mises stress, σ_v	228.57	MPa
Total deformation, δ_L	0.0293	mm

The result data of tie rod for solar car is shown in **Table 7**.

1. NUMERICAL SIMULATION OF STEERING TIE ROD

The designed steering tie rod was analysed with static structural by using ANSYS 14.5. The input geometry was drawn in SolidWorks with result parameters.

3.1. Static Structure Analysis

A static analysis is used calculates the effect of steady loading condition on a structure, while ignoring inertia and damping effect. Static structure is used to determine the displacements, stress strain and forces in structures or components caused by load that do not induce significant inertia and damping effect. So research work is aimed to assess strength and deformation of Tie rod for different materials.The different properties of materials are Carbon steel, Aluminium alloy and Gray cast iron.

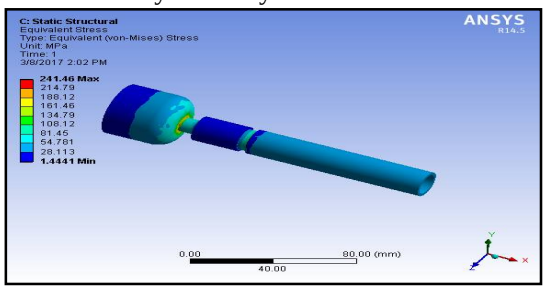

Fig.4. von-Mises stress in tie rod using Carbon steel

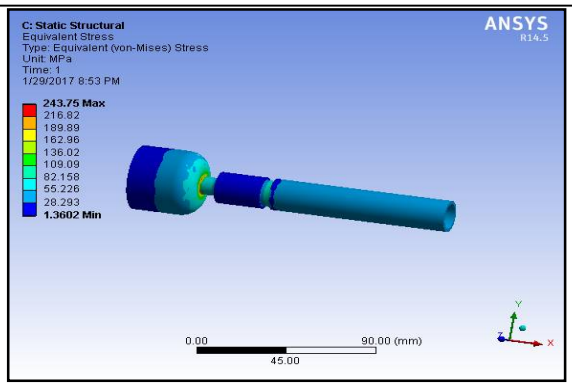

Fig.5. von-Mises stress in tie rod using Aluminium alloy

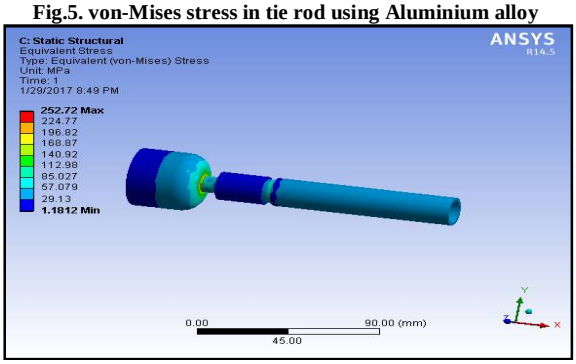

Fig.6. von-Mises stress in tie rod using Gray cast iron

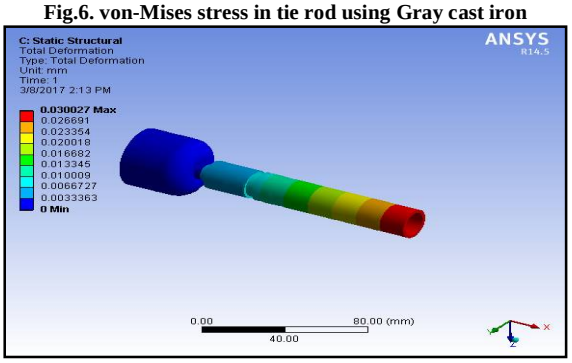

Fig.7. Maximum deflection of tie rod for Carbon steel

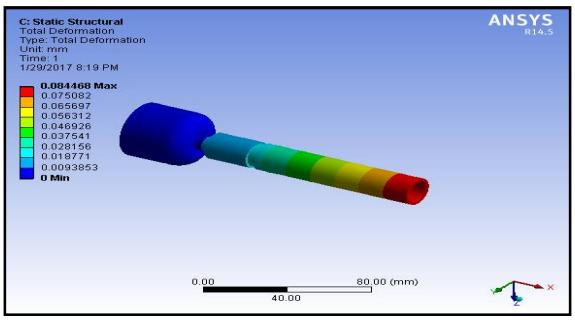

Fig.8. Maximum deflection of tie rod for Aluminium alloy

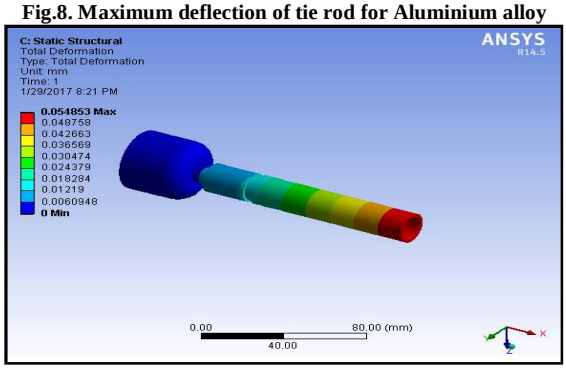

Fig.9. Maximum deflection of tie rod for Grey cast iron

In these three materials, the values of von-Mises are nearly equal but the total deformation of steel tie rod is less than other materials. So the Carbon steel is suitable for steering tie rod.

3.2. Modal Analysis

Modal analysis is important in vibration point of view. i.e. Vibrations in body are calculated up to what frequency the steering rod can sustain the load or Harmonic frequency of the body. Use modal analysis to determine the vibration characteristics (natural frequencies and mode shapes) of a structure or a machine component while it is being designed.

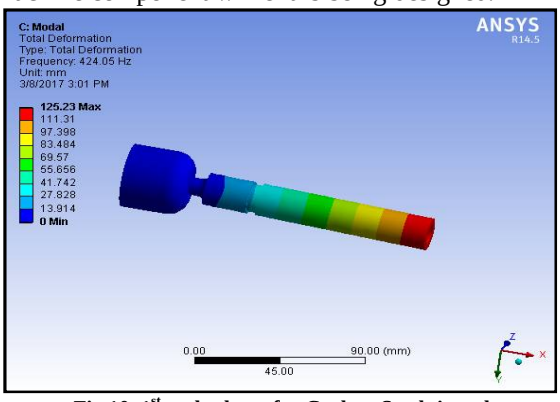

Fig.10. 1st mode shape for Carbon Steel tie rod

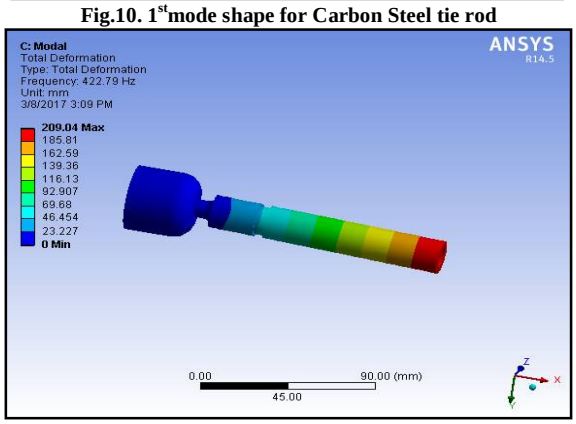

Fig.11. 1st mode shape for Aluminium alloy tie rod

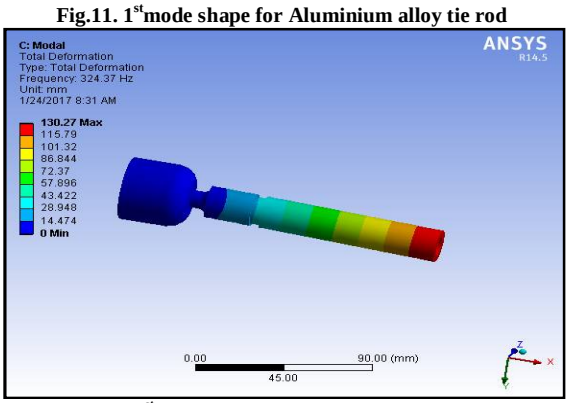

Fig.12. 1st mode shape for Gray cast iron tie rod

a) Calculations to Find the Working Frequency for Tie Rod

Working frequency is given by:

$$f(Hz) = \frac{1}{2\pi}\sqrt{\frac{g}{\delta}} \quad (23)$$

Where, g = the acceleration due to gravity(m/s^2)

δ = the displacement (mm)

Table 8: Frequency of Tie Rod for Different Materials

Material	Carbon Steel	Aluminium Alloy	Gray Cast Iron
Working Frequency(Hz) Using Theoretical Results	92.09	54.85	68.22
Natural Frequency(Hz) Using FE Results	424.05	422.79	324.37

From the above **Table 8** the natural frequency of each material tie rod is high enough that the working frequency of each material tie rod will not excite the tie rod into resonance.

3.3. Buckling Analysis

Buckling analysis is carried out in order to obtain the first mode Eigen value, which will when multiplied by the applied compressive load, gives the linear Buckling load.This paper focuses on the study of buckling load on the Tie rod of steering system that undergoes an axial compression.

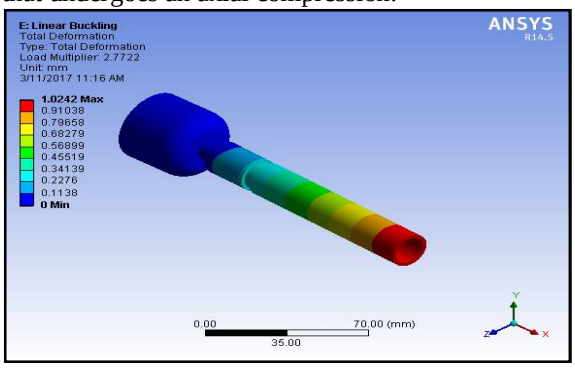

Fig.13. Buckling Mode Shape for Carbon Steel Tie Rod

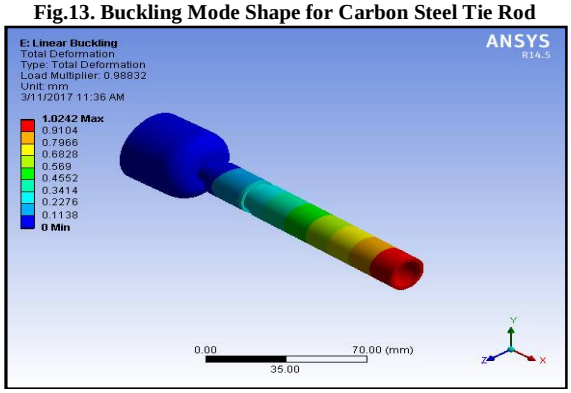

Fig.14. Buckling mode shape for Aluminium alloy tie rod

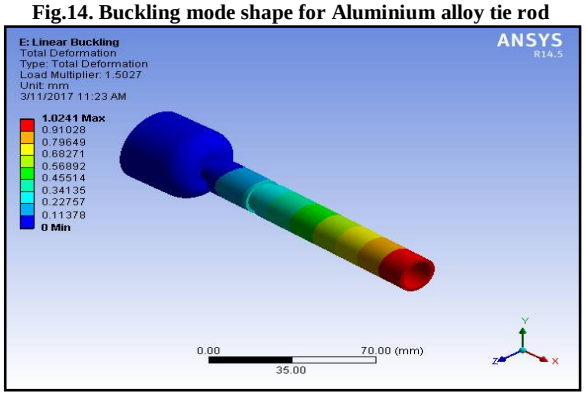

Fig.15. Buckling mode shape for Gray cast iron tie rod

a) Critical Buckling Load for Tie Rod using FE Results

Maximum critical buckling load P_{cr} for tie rod calculation using FE results is carried out by taking 4810.98 N forces and load factor 2.772 for Carbon steel Tie rod, 0.988 for Aluminium alloy tie rod and 1.503 for Gray cast iron tie rod. Therefore, the Maximum critical buckling load for tie rod is given by: [5]

P_{cr}= Load factor × Applied load (24)

b) Critical Buckling Load for Tie Rod using Theoretical Result

The Euler's buckling formula for column one end fixed and other end hanged is given by: [5]

$$P_{cr} = \frac{\pi^2 EI}{4L^2} \quad (25)$$

Table 9: Critical Buckling Load for Tie Rod

Material	P_{cr} in KN Using FE Results	P_{cr} in KNUsing Theoretical Results	%Error
Carbon Steel Tie Rod	13.33	13.03	2.25%
AluminiumAlloy Tie Rod	4.75	4.62	2.74%
Cast Iron Tie Rod	7.23	7.16	0.97%

The maximum buckling load for tie rod using FE results and theoretical results is shown in the Table IX. Among Carbon steel tie rod is giving good results compared to Gray cast iron and Aluminium alloy tie rod. Hence Carbon steel tie rod is preferable material for the design of car tie rod.

CONCLUSIONS

The steering tie rod of 3D model was drawn with SolidWorks software and analyze in ANSYS 14.5. Static structure analysis has been carried out on steering tie rod. Carbon steel, Aluminium alloy and Gray cast iron are chosen for this research. In these three materials, the values of von-Mises are nearly equal. But the total deformation of Carbon steel is less than other materials. So the Carbon Steel is suitable for steering tie rod.

In the modal analysis, the 1stMode natural frequency of Carbon steel tie rod is 424.05 Hz, Aluminium alloy Tie rod is 422.79Hz and Graycast iron tie rod is 324.37Hz. The 1stmode natural frequency of Carbon steel tie rod component is greater than the Gray cast iron and Aluminium Tie rod component, so Carbon steel tie rod is more suitable material for design of car tie rod.

In the buckling analysis, the critical buckling loads of tie rod are obtained. The critical buckling load obtained for Carbon steel tie rod is 13.33KN, for Aluminium alloy tie rod is 4.75KN and for Gray cast iron tie rod is 7.23KN.The theoretical calculated critical buckling load for Carbon steel tie rod is 13.03

KN closely meets with the FEA critical buckling load for Carbon steel tie rod is 13.33 KN. The error between the experimental and FEA critical buckling load is 2.25%, which is acceptable error.

Carbon steel material is suitable for the manufacture of the tie rod of an automobile vehicle as it shows better mechanical properties compared to Gray cast iron and Aluminum alloy material.

ACKNOWLEDGMENTS

A special thanks is offered to Dr. Tin San, Professor and Head of Department of Mechanical Engineering, Mandalay Technological University, for his encouragement, constructive guidance and kindly advice throughout the preparation of this paper.

The author especially would like to take this opportunity to express my sincere gratitude, respect and regards for supervisor Dr.HtayHtay Win, Professor, Department of Mechanical Engineering, Mandalay Technological University, under whose guidance, constant encouragement, patient and trust, I have worked on this paper.

REFERENCES

1. Dr. N. K. GIRI, "Automobile Mechanics", KHANNA publishers, 1996.
2. Thomas .D. Gillespie, "Fundamental of Vehicle Dynamic", Society of Automatic Engineers, 2000.
3. A. van Berkum, "Chassis and suspension design FSRTE02", TechnischeUniversiteit Eindhoven Department of Mechanical Engineering, 2006.
4. LeidlandAndersen, "Modeling, analysis and testing of the steering system in a formula student car FS-UiS2013", University of Stavanger, 2009.
5. Pradeep Mahadevappa Chavan1 and M Patnaik "Performance evaluation of passenger car tie rod using numerical and theoretical approach with different materials" IJRET: International Journal of Research in Engineering and Technology, Volume: 03 Issue: 08,2014
6. Prashant R. Vithalkar "Study of Analysis of Bus Passenger Tie Rod: A Review" IJRET: International Journal of Research in Engineering and Technology, Volume: 04 Issue: 11,2015.

★★★