DESIGN AND SIMULATION OF CONVERTER WITH THYRISTOR CROWBAR IN WIND POWER APPLICATION

[1]MOE YU MON, [2]MIN MIN OO

[1,2]Department of Electrical Power Engineering, Mandalay Technological University, Mandalay, Myanmar
E-mail: [1]moeyumon86@gmail.com, [2]minminooep@gmail.com

Abstract- Nowadays, renewable energy sources, wind power is one of the most attractive solutions. AC/DC/AC power converter extracts power from variable speed permanent magnet synchronous generator (PMSG) and feed it to supply a standalone load. The output voltage and frequency of the PMSG is variable in nature due to non uniform wind velocity. Therefore, power electronic converters are needed to get constant frequency and constant voltage. The variable three-phase AC output at the PMSG is rectified by a diode rectifier and the DC link is maintained constant by a thyristor crowbar. Thyristor crowbar is provided with silicon controlled rectifier (SCR), transistor and zener diode. The crowbar circuit is used to protect the battery from over voltage of rectifier output voltage. The converter output is fed to three-phase inverter which employs a SPWM technique, the output of which can be fed to a load or grid. The inverter circuit oscillates DC voltage or current into a desired AC voltage or current waveform and frequency. Circuit simulation and analysis was done by Proteus (8.3 Professional) and MPLAB IDE. The wave shaping timing pulses are generated by using microcontroller PIC16F628A and required signals are generated for the driver circuit of the inverter.

Keywords- Converter, Permanent Magnet Synchronous Generator (PMSG), Standalone Load, Thyristor Crowbar, Wind Power.

I. INTRODUCTION

Wind is one of the renewable sources of energy which is nonpolluting. The wind is a by-product of solar energy. The surface of the earth heats and cools unevenly, creating atmospheric pressure zones that make air flow from high to low pressure areas and also rotation of earth causes wind. This wind is capable of exerting a force and creates motion which is utilized in the wind energy conversion systems. Small scale wind energy conversion systems are more efficient and cost effective. Among AC type generation systems, those based on permanent magnet synchronous generator (PMSG) is one of the most favourable and reliable methods of power generation for small and large scale wind turbines. To meet the amplitude and frequency requirements of conventional load and grid, the amplitude frequency outputs of PMSG require additional conditioning and power electronic interfacing [6]. Advantages of PMSGs are highest energy yield, higher active/reactive power controllability, absence of brush/slip ring, low mechanical stress, absence of copper losses on rotor, high power density, lower rotor inertia, robust construction of the rotor and low level of acoustic noise [4]. Wind turbine with a permanent magnet synchronous generator can be used a back-to-back full scale pulse width modulation (PWM) converter connected to the grid. In a simple AC/DC/AC converter for grid connected wind power generation systems is used with advantages that include inexpensive cost and easy control of the generator load [3]. In variable speed wind turbine technologies, the PMSG has received increased attention because of its operation at high power factor, high efficiency and increased reliability due to its self excitation property. Three-phase six switch rectifier is used as generator side converter but this rectifier suffers from several disadvantages; larger power losses due to switching operation of three semiconductor devices in each interval, expensive structure, and short circuit possibility through the leg. This paper presents an efficient small scale wind energy conversion system using PMSG and power electronic converters. In this system the PMSG output is converted to this constant DC output is converted to AC using a SPWM three-phase inverter [5].

II. DESCRIPTION OF THE SYSTEM

2.1. Block Diagram of the System

The wind turbine is the prime mover of the permanent magnet synchronous generator. As the wind velocity is non uniform in nature, the output of PMSG will be fluctuating. Therefore it cannot be interfaced directly to the load. The output of PMSG is converted to DC using a full bridge rectifier and the variable DC is charged into 12 V battery with the help of thyristor crowbar. This DC voltage is converted to AC using an inverter. This inverter is operated with SPWM technique and fed to the load.

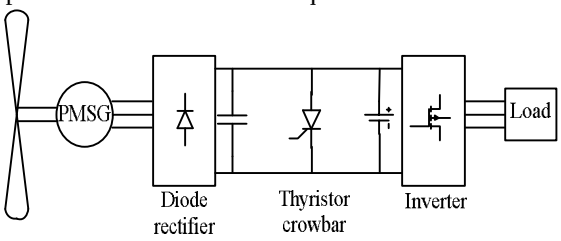

Fig.1. Block Diagram of the System

2.2. Permanent Magnet Synchronous Generator

The permanent magnet synchronous generator are being used in many small generating systems,

particularly wind power system. The PMSG is typically constructed with magnets attached to the rotor and a three-phase winding in the stator core. It is particularly an attractive option in renewable energy applications, because it has high conversion efficiency, primarily due to the fact that no energy is required to provide the magnetic field. It is simple design, robust and reliable. PMSG do not require an additional DC supply for the excitation circuit. Furthermore the mechanical friction is low in comparison to other machines because there is no brush gear and does not require a gear box. Unlike induction generators these do not require reactive magnetizing current for excitation. However PMSG have these advantages, the negative side is that the permanent magnets required for PMSG are quite expensive, at high temperatures the magnets get demagnetized.

2.3. Three-phase Diode Rectifier

The diode rectifier is the most simple, cheap, and rugged topology used in power electronic applications. The most disadvantage of this diode rectifier is its disability to work in bi-directional power flow. The rectifier can be connected directly to the three-phase output of wind generator as shown in figure 2. The variable output DC voltage from three-phase diode bridge rectifier can be obtained. The voltage across the diodes is shown in table 1 for various 60˚ intervals.

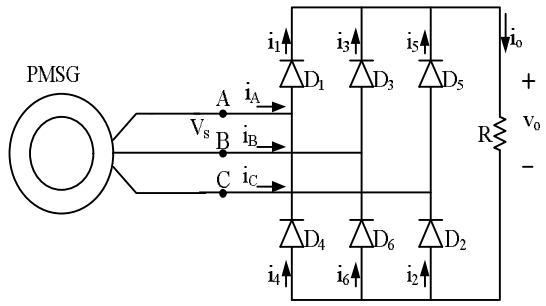

Fig.2. Diode Bridge Rectifier

Table1: Operation of Three-phase Rectifier

Period	Output voltage	On diodes	
		Odd-numbered	Even-numbered
0-60˚	V_{CB}	D_5	D_6
60˚-120˚	V_{AB}	D_1	D_6
120˚-180˚	V_{AC}	D_1	D_2
180˚-240˚	V_{BC}	D_3	D_2
240˚-300˚	V_{BA}	D_3	D_4
300˚-360˚	V_{CA}	D_5	D_4

The RMS output voltage of wind generator is;

$V_s = 18$ V

The output fluctuates between V_{min} and V_{max};

$V_{max} = \sqrt{2}\, V_s = \sqrt{2} \times 18 = 25.46$ V

$V_{min} = 1.225 V_s = 1.225 \times 18 = 22.05$ V

The peak-to-peak ripple voltage is 25.46 – 22.05 = 3.41 V

The average or DC load voltage is;

$$V_{o(avg)} = 0.955 \times V_{max} = 0.955 \times 25.46 = 24.31 \text{ V}$$

The output power of the wind generator is;

$P_{out} = 500$ W

$$I_{peak} = \frac{P_{out}}{V_{max}} = \frac{500}{25.46} = 19.6 \text{ A}$$

The average load current is;

$$I_{o(avg)} = \frac{3}{\pi} I_m = \frac{3}{\pi} \times 19.6 = 18.7 \text{ A}$$

The average diode current is;

$$I_{D(avg)} = \frac{I_{o(avg)}}{3} = \frac{18.7}{3} = 6.2 \text{ A}$$

Rectifier efficiency is;

$$\eta = \frac{P_{DC}}{P_{AC}} \times 100 = \frac{V_{o(avg)} I_{o(avg)}}{V_m I_m} \times 100 = \frac{24.31 \times 18.7}{25.46 \times 19.6} \times 100 = 91\%$$

2.4. Thyristor Crowbar

The crowbar circuit is shown in figure 3 and operating flow chart of this circuit is shown in figure 4. This circuit is used to prevent the battery from damaging. This circuit utilizes a zener diode. The rectifier circuit converts the alternating current AC output of wind generator into the direct current DC output. The battery will damage when the DC voltage is greater than 14.2 V. The maximum withstanding voltage capacity of 12 V battery is 14.2 V. Using the crowbar circuit, the problem can be solved. The designed circuit uses silicon controlled rectifier (SCR), transistor and zener diode. The zener diode is connected to the base of the transistor which is turn on when the crowbar output goes above 14.2 V. With the help of the transistor amplifier by amplifying the excess voltage, the gating signal is generated to the SCR. The SCR in the crowbar circuit will activate and then the large current through the thyristor, which are grounded on the downside. The zener diode will

not conduct when the crowbar output goes below 14.2V.

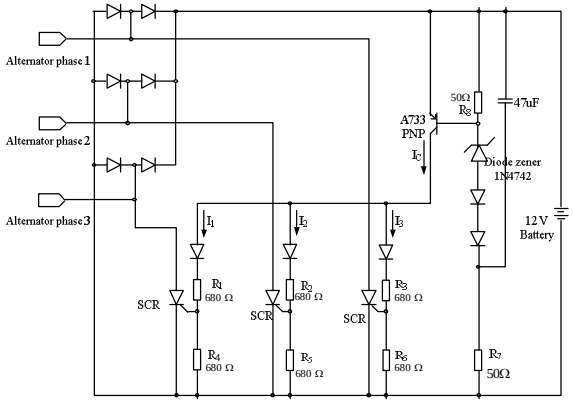

Fig.3. Circuit Diagram of Thyristor Crowbar

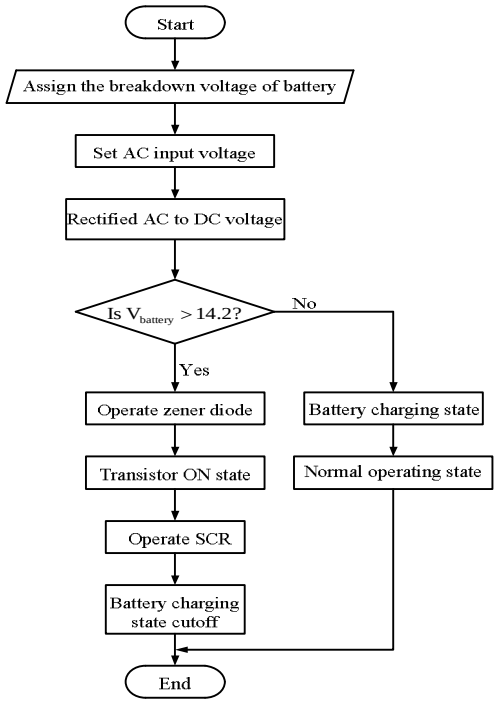

Fig.4. Operating Flow Chart of Thyristor Crowbar

Zener diode (1N4742) is used for the crowbar circuit.
The maximum current of zener diode = 21 mA
Battery voltage (maximum) = 14.2 V
Breakdown voltage of zener diode = 12 V

$$R_7+R_8 = \frac{\text{Battery voltage (max)} - \text{Zener breakdown voltage}}{\text{The maximum current of zener diode}}$$

$$= \frac{14.2-12}{21\times10^{-3}} = 104\ \Omega$$

Therefore, $R_7 = 50\ \Omega$ and $R_8 = 50\ \Omega$ are selected for this circuit.

$I_C = 31$ mA

$$\text{Therefore, } I_1 = I_2 = I_3 = \frac{I_C}{3} = \frac{31\times10^{-3}}{3} = 10.33\ \text{mA}$$

$$R = \frac{V}{I} = \frac{14.2}{10.33\times10^{-3}} = 1374\ \Omega$$

R_1 and R_4 are connected in series.

$$R_1 = R_4 = \frac{1374}{2} = 687\ \Omega$$

Therefore, $R_1 = 680\ \Omega$ and $R_4 = 680\ \Omega$ are selected.
Similarly $R_2 = R_3 = R_5 = R_6 = 680\ \Omega$

2.5. Inverter

An inverter is a circuit that converts DC to AC. Pulse Width Modulation (PWM) is a switching technique that is used to decrease the total harmonic distortion in the inverter circuit. The DC link voltage is fed to a three-phase inverter which converts the constant DC to constant AC having a frequency of 50 Hz. The objective in pulse width modulated three-phase inverters is to shape and control the three-phase output voltages in magnitude and frequency with an essentially constant output voltage V_o. The schematic diagram of a three phase inverter is shown in the figure 5. There are six switches which are operated in a sequence based on the pulses generated by SPWM technique. The switches are operated in 120˚ conduction mode. In this mode each transistor conducts for 120˚. Only two transistors remain ON at any instant of time. The output of the three-phase inverter is given to the load. The output power of the inverter is 500 watts and input DC voltage is 12 V. Therefore, the peak current of the MOSFET is;

$$I_{peak} = \frac{P_{out}}{E_{DC}} = \frac{500}{12} = 41.667\text{A}$$

The peak reverse blocking voltage is;
$V_{BR} = E_{DC} = 12$ V
The switching frequency of each MOSFET is 2 kHz.

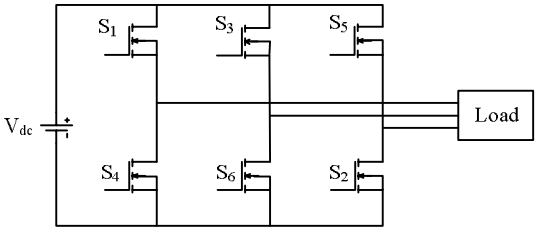

Fig.5. Schematic Diagram of Three-phase Inverter

III. CONDITION OF THYRISTOR CROWBAR CIRCUIT

The condition of thyristor crowbar is shown in figure 6. The three-phase AC supply voltage 18 V is rectified using a three-phase diode rectifier. The rectified output voltage is 16.5 V. This voltage exceeds 14.2 V. Therefore, zener diode, transistor and SCR operate in this voltage. In this cases, thyristor crowbar circuit is essential to protect the battery from over voltage.

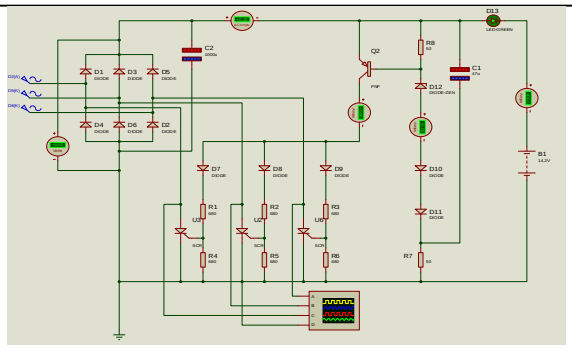

Fig.6. Condition of Crowbar Circuit at Supply Voltage 18 V

1. Simulation Circuit Diagram of AC/DC/AC Converter

Simulation circuit diagram of electronic converter is shown in figure 7. In this figure, DC output of three-phase bridge rectifier is supplied to the three-phase inverter. Three MOSFETs driver ICs (IR2106) are used to drive the three-phase inverter. The output voltage of inverter is step up to 400 VAC by transformer. To measure the output voltage of inverter and signals from the circuit, four channels digital oscilloscope is used. Figure 8 and figure 9 show the SPWM timing pulse signal of PIC microcontrolller. In figure 8, channel A and C are configured as the timing pulse generation for the positive half cycle and channel B and D are configured as the timing pulse generation for the negative half cycle driven pulses generation. In figure 9, channel A is configured for the positive half cycle and channel B is configured as the timing pulse generation for the negative half cycle.

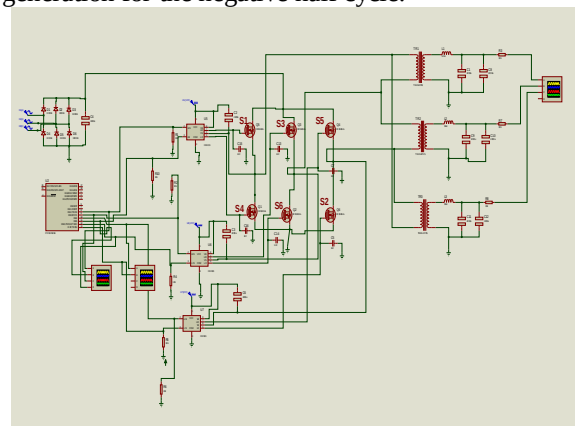

Fig.7. Simulation Circuit Diagram of AC/DC/AC converter

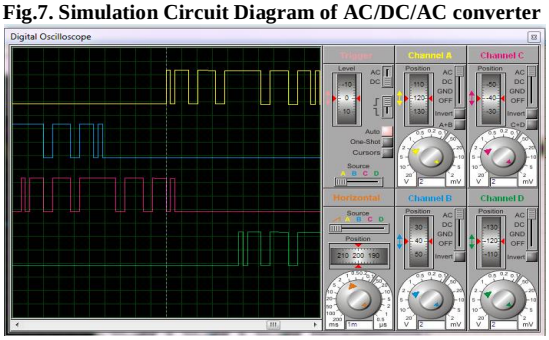

Fig.8. Simulation Output Pulses of PIC 16F628A

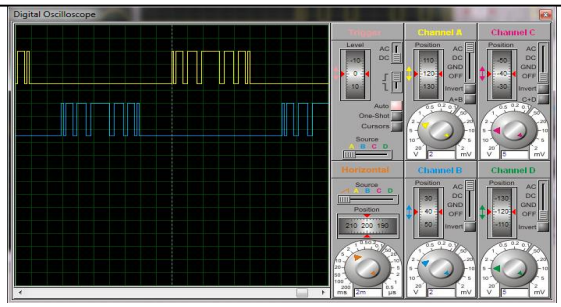

Fig.9. Simulation Output Pulses of PIC 16F628A

Figure 10 shows the SPWM timing pulse signal of PIC16F628A microcontroller using MPLAB IDE software. RB2, RB3 and RB4 pins are configured as the timing pulse generation for the positive half cycle and, RB5, RB6 and RB7 pins are configured for negative half cycle driven pulses generation. At the control circuit, 4 MHz crystal is use as the clock of the PIC. Since, the internal clock is one-fourth of crystal, the program cycle is 1 MHz or 1 microsecond for one cycle. Figure 11 shows the output waveform of the AC/DC/AC converter. The program flow chart of SPWM inverter control system is illustrated in figure 12.

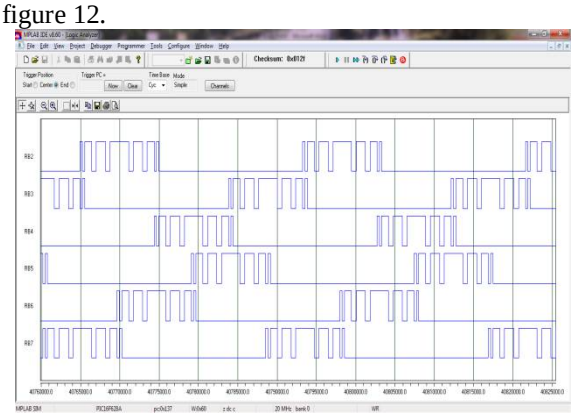

Fig.10. Simulation Output Pulses of PIC 16F628A

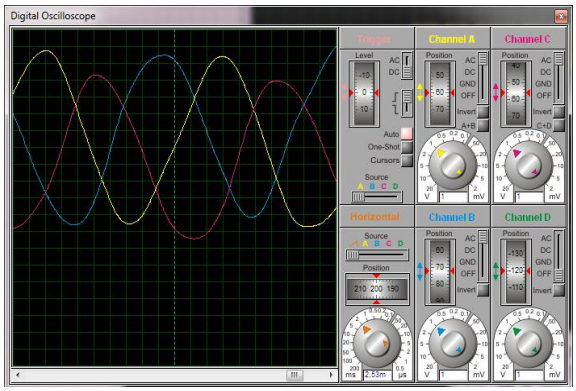

Fig.11. Output Waveform of Inverter

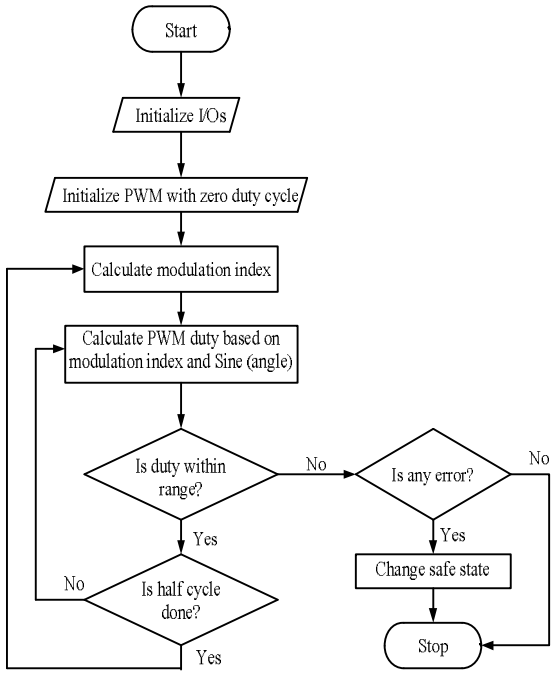

Fig.12. Program Flow Chart of SPWM Inverter

CONCLUSIONS

Wind speed is considered as a variable function with time; as a result, generated power from the wind turbine is also a variable function with time. Therefore, power electronic converter is needed between the variable speed wind turbine and the load or grid. The power electronic components used in the power conversion system was calculated, and the converter models was designed. In order to control the unregulated dc voltage of rectifier due to changes in wind speed, thyristor crowbar circuit was used. For circuit simulation, Proteus and MPLAB IDE are applied. From the simulation results, the output of converter is 50 Hz constant despite the input frequency is varying with various wind speed. Therefore, this converter can be used in variable speed wind power application.

ACKNOWLEDGMENTS

The author wishes to thank to her teachers, Department of Electrical Power Engineering, Mandalay Technological University. Similar thanks to all for their instructions and willingness to share their ideas throughout all those years of study.

REFERENCES

[1] V.Vidyanagar, "Over Voltage Protection Using Crowbar Devices for Low Voltage Loads", International Journal on Recent and Innovation Trends in Computing and Communication (IJRITCC), Vol 3, Issuue 12, Dec (2015).

[2] A.Press"Protective Strategy of Crowbar Circuit when Network Voltage Drop Sharply", International Conference on Information Tech and Management Innovation (ICITMI), (2015).

[3] G. Vijayalakshmi, "Design and Implementation of Controller for Wind Driven PMSG Based Standalone System'', International Journal of Innovative Research in Electrical, Electronics, Instrumentation and Control Engineering (IJIREEICE), Vol 2, Issue 7, July (2014).

[4] Hyong Sik Kim, "Review on Wind Turbine Generators and Power Electronic Converters with the Grid Connected Issues", Australasian Universities Power Engineering Conference (AUPEC), Dec (2010).

[5] F.Iov and F.Blaabjerg, "Power Electronics Control of Wind in Distributed Power Systems", Dept. of Energy Technology, Aalborg University, Denmark, Dec (2009).

[6] R.Esmaili, "Application of Advanced Power Electronics in Renewable Energy Sources and Hybrid Generating Systems", Dept. of Electrical and Computer Engineering, Ohio State University, (2006).

★★★