BLUETOOTH BIC TREE PROTOCOL ON ANDROID PLATFORM

JOHN LESTER S. CONCON, JEMUEL I. ELIMANCO, MIKE JOSEPH C. VILLAFUERTE, MANOLITO C. BAÑASIA, MICHAEL DELA FUENTE, MSGITS, ILUMINADA VIVIEN R. DOMINGO, DBA

College of Computer and Information Sciences, Polytechnic University of the Philippines, Sta. Mesa, Manila*1

Abstract- The motivation of this paper is to provide an effective solution on Bluetooth networking. Although Bluetooth is enabled on the most number of devices, the devices are not fully connectable because of the limitation of Bluetooth protocol. There exist several methods to construct a Bluetooth scatternet topology. The configuration of a scatternet influences the performance of the network considerably. BIC Tree Protocol on Android Platform focuses on establishing Bluetooth network by identifying the key elements of the study in the network which are the Bridge, Independent, and the Client. That will result into the establishment of the Ad-hoc network.

In this study, the researchers used the BIC (Bridge, Independent, and Client) Tree Protocol as the tool for study. It is a tool which utilized the vast Bluetooth technology and the Android Platform. Based from the findings of the study, the proponents reached the following conclusion through a series of experiments and tests. The accuracy of the system when establishing connections and performing step by step procedures based from the experiments done by the researchers on android devices was proven accurate with a rate ranging from 90-100%. The maximum number of bridges the protocol can support without errors (message errors) is 5 bridges. The range 1-5 bridges can guarantee a complete connection and message passing. Theoretically, the proponents' application can support more than 13 bridges but the proponents don't have chance to test it because of device scarcity. The more number of bridges the message needs to travel, the more prone the connection and messaging to delay and errors.

With the ideal results of the study, this idea of Bluetooth and network formation is a good research direction and further developments and improvements can be accomplished for building ad-hoc networks. The current trends for Bluetooth today are too many to cover if it is to succeed as a technology for building adhoc networks. This paper was intended as a brief introduction to the many challenges that the Bluetooth Technology faces and also gives a small description of work that had been done in this area. The proponents have described some of the issues that need to be tackled and that have been left unspecified by the current standards. This study is just an introduction to Bluetooth technology and its wide field of study including network formation. The proponents finished the plan up to disconnection but the tool doesn't have it. The researchers recommend finishing the BIC Tree Protocol up to its disconnection features. The proponents also recommend exploring other applications of BIC Tree Protocol just like Robotics having it in the network formation and Bluetooth as a communication medium. Finally, the proponents recommend considering transferring larger message files. Up to now, the tool can only transfer a string of messages. Larger files include video and voice.

Index Terms - Wireless Network connection, Bluetooth, BIC Tree Protocol, Zigbee, Brdige, Android Platform

I. INTRODUCTION

The Bluetooth technology was developed to provide a wireless interconnect between small mobile devices and their peripherals [1]. In link establishment using Bluetooth, one device acts as server, and another device(s) act as slave. One device has to act as a "master", while the others (a maximum of seven) called "slaves" connect to this device [2]. Two connectivity topologies are defined in Bluetooth: the piconet and the scatternet. A piconet is WPAN (Wireless personal area networks) formed by a bluetooth device serving as master in the piconet and one or more Bluetooth devices serving as slaves[3]. Scatternet is a collection of operational Bluetooth piconets overlapping in time and space [4].

The motivation of this paper is to provide an effective solution on Bluetooth networking. Although Bluetooth is enabled on the most number of devices, the devices are not fully connectable because of the limitation of Bluetooth protocol [5]. A Bluetooth network system is needed to connect all the devices in proximity and support corresponding applications [6]. There exist several methods to construct a Bluetooth scatternet topology [7]. The configuration of a scatternet influences the performance of the network considerably. Therefore, it is important to devise an efficient scatternet construction protocol and fully utilize the capabilities of Bluetooth adhoc networking [8].

To utilize Bluetooth as a layer 2 multi-hop subnet for global IP network, there are two missing protocols in Bluetooth stack: network formation and routing [9]. Network formation is a class of protocol dealing with how to connect Bluetooth nodes automatically [10]. In this paper, the proponents aim to develop a mobile application that will provide a longer range of device to device communication and a wireless ad-hoc network by creating a new network formation protocol (BIC protocol) that is free from broadcast storms and has route optimization for devices that uses Bluetooth as a connection medium. This protocol can send a message to an exact device using its Bluetooth ID by broadcasting every time the destination cannot be found and after the device is found, an acknowledgement will be sent back to the source device containing the destination network address if the device exists in the network [10]. The

proponents see that certain topologies like mesh creates broadcast storms that can make the network inefficient. Some of Bluetooth network also needs to configure in order to make scatternet formation [11]. If a device exceeds its distance limit (radius of Bluetooth signal), it cannot communicate with other device [12].

At the end of the research process, the proponents answered the following questions:

1.) What is the accuracy rate of the system when forming connections to build a network in terms of?

a. Independent to Independent Connection
b. Independent to Bridge Connection
c. Independent to Client Connection
d. Bridge to Bridge Connection
e. Client to Bridge Connection
f. Client to Client Connection
g. In one to one connection Independent to Client Connection

2.) What is the maximum number of bridges the protocol can support without errors (message error)?

II. CONCEPTUAL FRAMEWORK OF THE STUDY:

The System focuses on any Android device that has Bluetooth and wants to establish a network [13]. Applying the System Protocol BIC Tree will result to Bluetooth network.

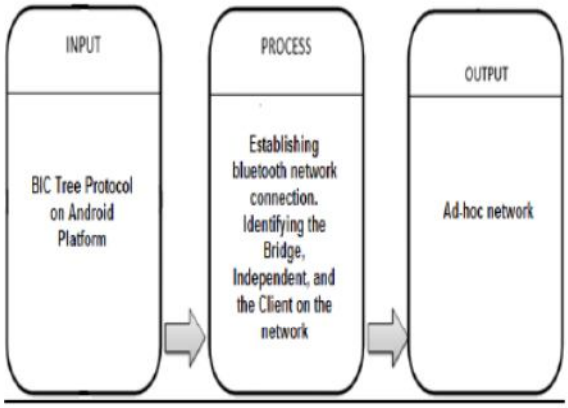

Figure 1.2 Conceptual Framework Study

BIC Tree Protocol on Android Platform focuses on establishing Bluetooth network by identifying the key elements of the study in the network which are the Bridge, Independent, and the Client [13]. That will result into the establishment of the Ad-hoc network.

III. DEVELOPED SYSTEM:

Messages in The protocol:

Message0 – The message typed by the user to be sent on a specific device inside the global network.
Message1 – Contains the device status & Mac Address
Message2 – Contains configuration to remote device and Network address
Message 3 – Contains configuration to remove device and Network address
Message 4 – Contains Mac Address to be deleted to the bridge
Message 5 – Contains Routing table to be added to the Routing table of the new bridge
Message 6 – Contains Address Resolution Message to be added to the remote network
Message 7 – Contains Routing table to be broadcast all over the network.
Message 8 – Contains network address assignment
Message 9 – Set of global inside network Mac-Address and network address
Message 10 – Contains neighbor routing table

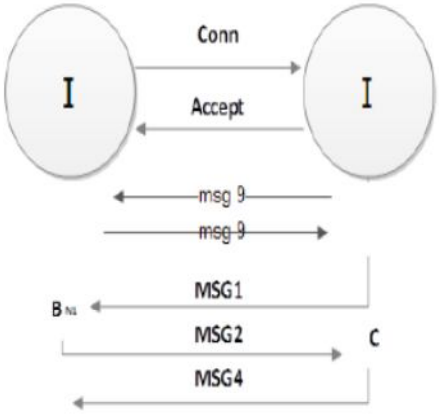

Figure 3.2 Independent to Independent Connection

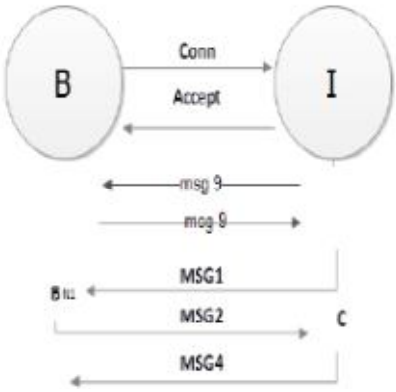

Figure 3.3 Bridge to Independent Connection

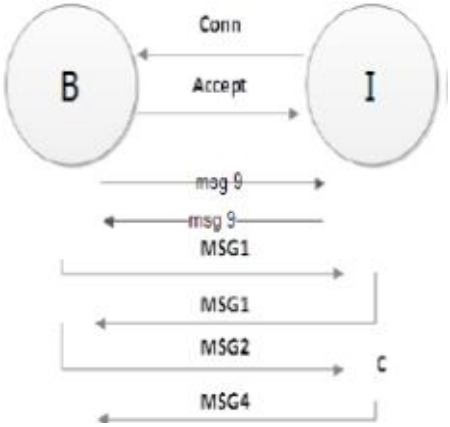

Figure 3.4 Independent to Bridge Connection

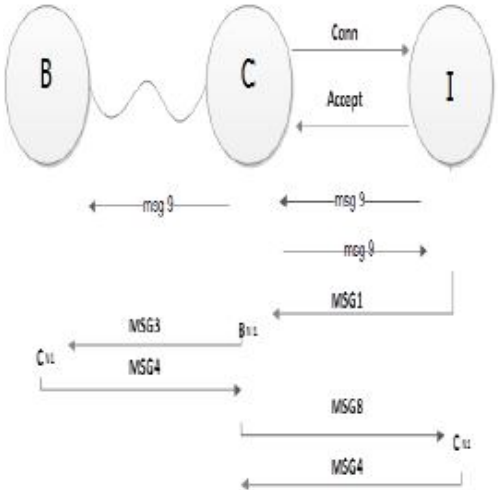

Figure 3.5 Client to Independent Connection (3 Devices)

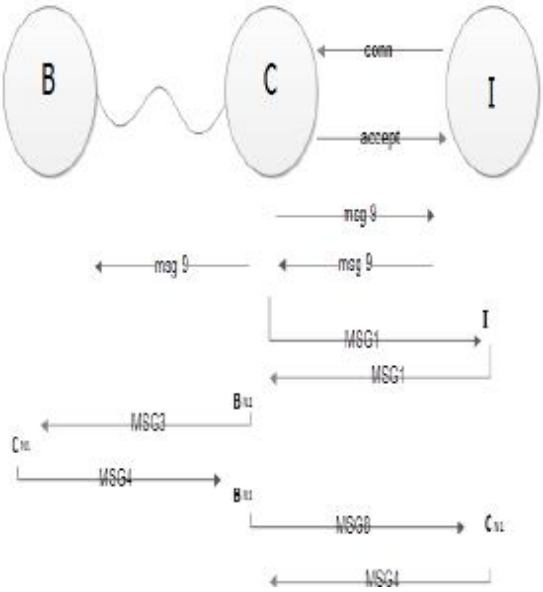

Figure 3.6 Independent to Client Connection (3 Devices)

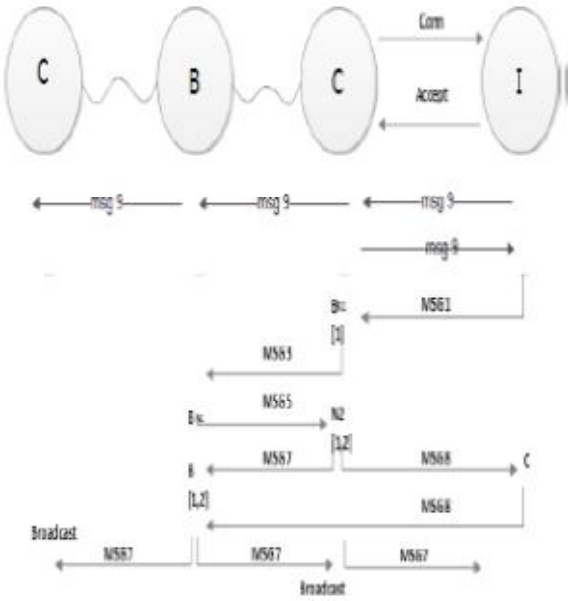

Figure 3.7 Client to Independent Connection

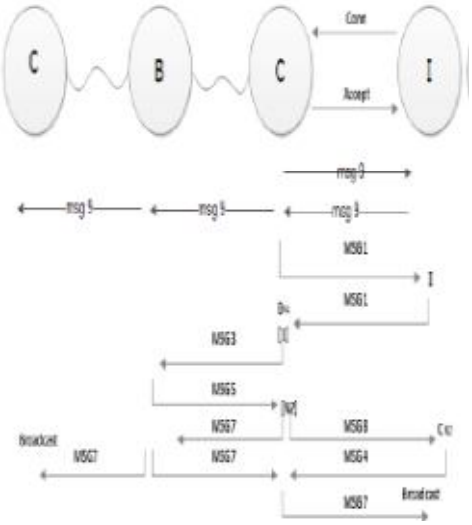

Figure 3.8 Independent to Client Connection (4 Devices)

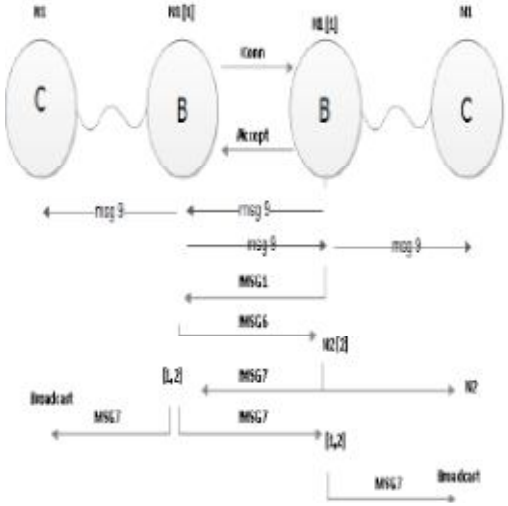

Figure 3.9 Bridge to Bridge Connection (4 Devices)

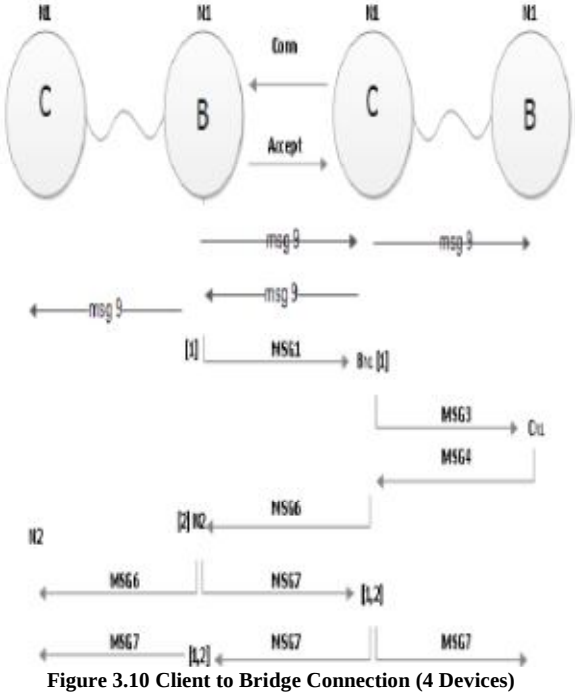

Figure 3.10 Client to Bridge Connection (4 Devices)

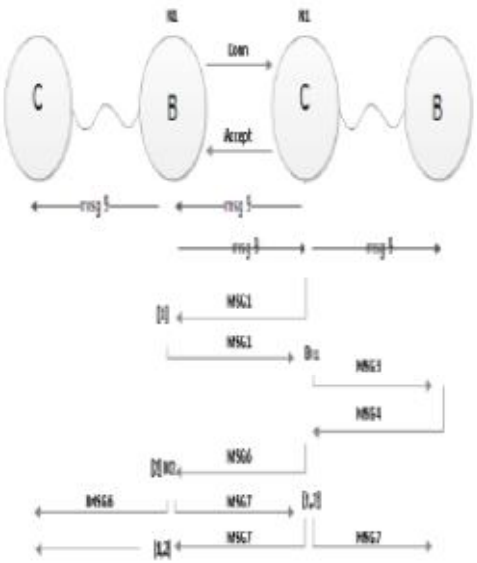

Figure 3.11 Bridge to Client Connection (4 Devices)

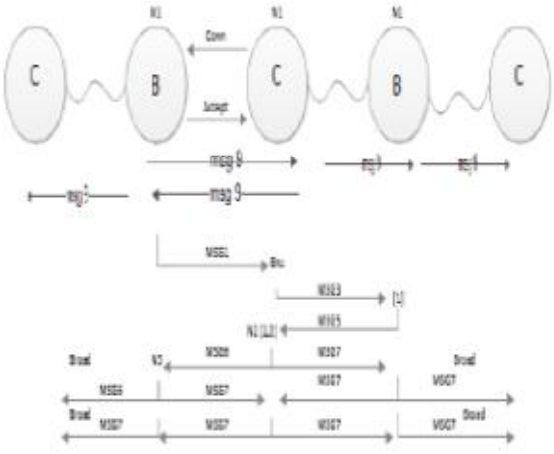

Figure 3.12 Client to Bridge Connection (5 Devices)

System Architecture

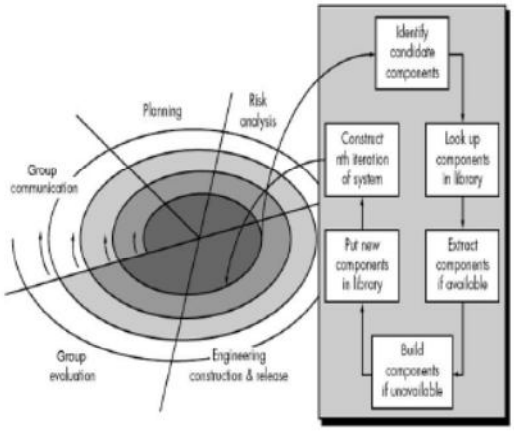

Component Based Development is a branch of software engineering that emphasized the separation of concerns in respect of the wide-ranging functionality available throughout a given software system [14]. It is a reuse-based approach to defining, implementing and composing loosely coupled independent components into systems [15]. This practice aims to bring about an equally wide-ranging degree of benefits in both the short-term and the long-term for the software itself and for organizations that sponsor such software.

There are several phases involved in this software development paradigm namely: Planning, Risk Analysis, Engineering Construction and Release, and Group Evaluation. The Planning phase is where the developers set goals and deadlines [16]. The Risk Analysis phase allows the planning of the solution to the problem and checking the effectivity of the proposed solution [17]. The Engineering Construction and Release phase checks if there are related program libraries and other helpful software[18]. The developers get those meaningful pieces of information and if there is no existing, they create their own. The Group Evaluation phase permits checking the output of the program, testing and debugging.

IV. RESEARCH METHOD & FINDINGS OF THE STUDY:

The researchers used the following tools to gather data: Android Phone, and Experiment Paper. Android Phones was used as mobile devices to establish and test connection and communication of Bluetooth BIC Tree Protocol [19]. Experiment papers were used to record results and changes on the network. The proponents used Android SDK to develop the mobile application [20].

The proponents evaluated the system based on the result of the experiments in regards to the conditions that is given in the scope and limitation of the problem. The researchers planned to use the system and test its range, counting the number of bridges the Bluetooth BIC Tree protocol can handle at the same time without having data loss. A piconet is only limited to 8 devices, having 1 master/bridge and 7 slaves/clients [21]. The proponents tested the data transfer accuracy of the system in sending data from end to end devices using bridges and its reliability to build connections on different devices on different occasions.

The researchers gathered data through experimentation. In this experiment, the proponents has full control of the environment [22]. The controlled variable for this experiment are the devices in the network and the distance between them. The devices has the application installed. The distance variable was manipulated in order to determine the effects in the dependent variable which is connection and communication. These experiments determined the data that will be analyzed and computed.
For this research, the proponents calculated the accuracy passing messages passing messages and

capability to held longer device communication. Bridges were counted and examined on errors regarding data transfer. It is computed in means of F1 score. The F1 score can be interpreted as a weighted average of the precision and recall, where an F1 score reaches its best value at 1 and worst score at 0. .

$$F_1 = 2 \cdot \frac{\mathrm{precision} \cdot \mathrm{recall}}{\mathrm{precision} + \mathrm{recall}}$$

Where
P (precision) = is the number of correct results divided by the number of all returned results
R (recall) = is the number of correct results divided by the number of results that should have been returned

The system used android phones/devices. The system must be accurate to build connections enabling users to build their Bluetooth Scatternet Network [23]. The accuracy for connections is computed by means of:
Formula for Accuracy
Accuracy = [Successful Connection/Total Attempts] x 100%

V. DISCUSSION

In evaluating problem statement 1, the proponents evaluated their system by and conducted their thesis implementation by experimenting and running the mobile application on android devices. The researchers reviewed and tested the Bluetooth BIC Tree Protocol on Android Platform connections based on its accuracy when forming different scenarios.

The figures below show the visual representation of each scenarios stated in the first problem statement. Bluetooth BIC Tree Protocol on Android Platform makes use of the Bridge (B),
Independent (I) and Client (C) device status.
a. For the Independent to Independent Connection:

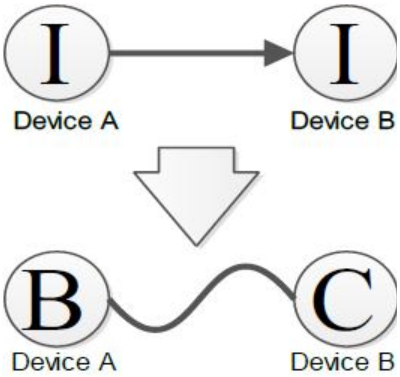

Figure 4.1 Independent to Independent Connection

Two devices that is both Independent in Status (indicated by symbol 'I'), Device A will connect to Device B, Device A will become Bridge (B) and Device B will become Client (C).

b. For the Independent to Bridge Connection:

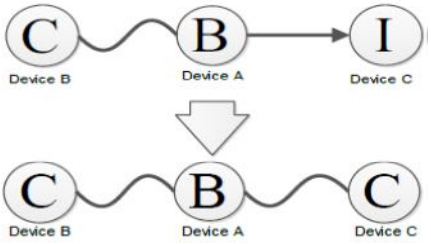

Figure 4.2 Independent to Bridge Connection

Device A will connect to Device C that is Independent in Status. Device A will remain Bridge because there is a device that is connected to Device B. Device C will become Client.
c. For the Independent to Client Connection:

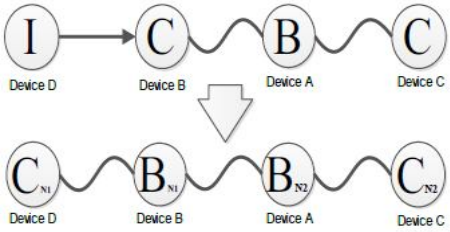

Figure 4.3 Independent to Client Connection

Device D will connect to Device B that is Client in Status. Device D will become Client and Device B will become Bridge. Device B became bridge because Device B is connected to Device A that is still connected.
d. For the Bridge to Bridge Connections:

- On 4 Devices

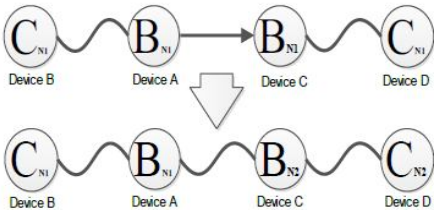

Figure 4.4 Bridge to Bridge Connection (4 devices)

Device A will connect to Device C which are both bridge and on network 1. Device A will become Network 1 and its Client which is Device B, while Device C will be in Network 2 and its Client which is Device D.

- On 5 Devices

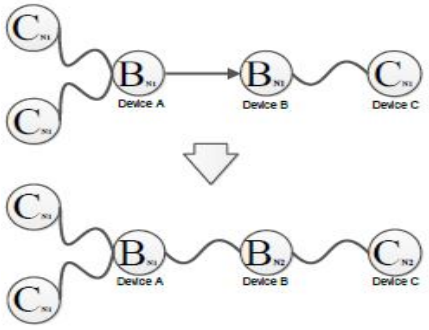

Figure 4.5 Bridge to Bridge Connection (5 devices)

Device A will connect on Device B that is both bridges. Device A will remain in Network 1 and its Client/s. Device B will be in Network 2 and its Client which is Device C.

- On 6 Devices

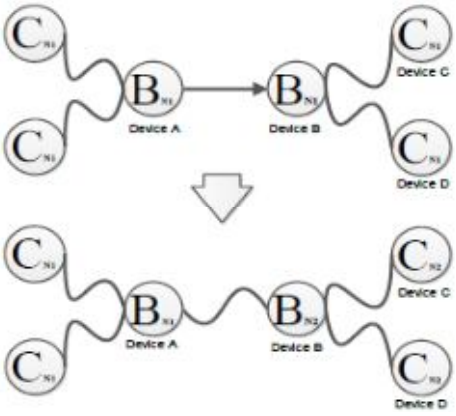

Figure 4.6 Bridge to Bridge Connection (6 devices)

Device A will connect to Device B, both are bridge on Network 1. Device A that is connected to Device B. Device A will remain Bridge on Network 1. While Device B will be in Network 2, both Device C and Device D will be in Network 2.

e. For the Client to Bridge Connection

- On 4 Devices (Client to Bridge)

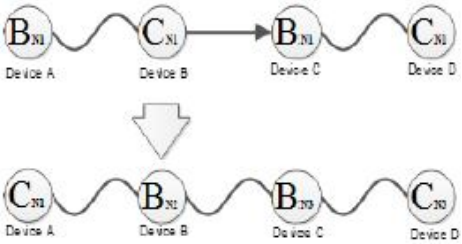

Figure 4.7 Client to Bridge Connection (4 devices)

Device B that is a Client will connect to Device C that is a Bridge. Device B will become Bridge while Device A will become Client. They will remain in Network 1, while Device C and Device D on Network 2.

- On 5 Devices (Client to Bridge)

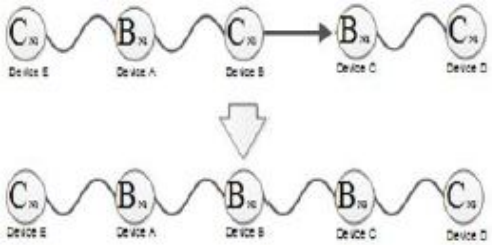

Figure 4.8 Client to Bridge Connection (5 devices)

Device B is on network 1 and will connect to Device C on network 2. Device B will become Bridge and will be on Network 2 while Device A will remain Bridge and still on Network 1. Device C will be on Network 3 and Device D which is a Client will be on Network 3.

- On 4 Devices (Bridge to Client)

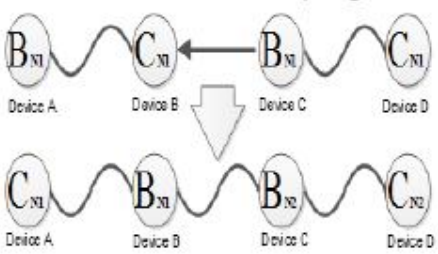

Figure 4.9 Bridge to Client Connection (4 devices)

Device C that is a Bridge will connect to Device B that is a Client. Device B will become Bridge while Device A will become Client. They will remain in Network 1, while Device C and Device D on Network 2.

- On 5 Devices (Bridge to Client)

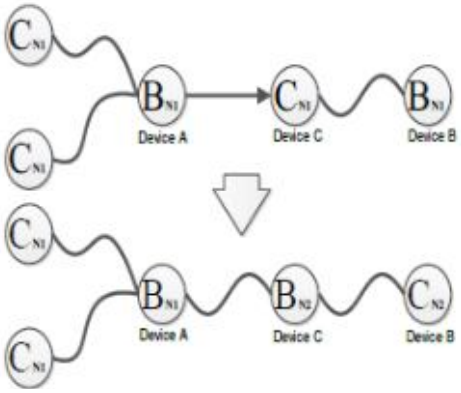

Figure 4.10 Bridge to Client Connection (5 devices)

Device A will connect on Device C which is a Client. Device A will remain bridge and on Network 1 with its Client, while Device C will become Bridge and will be on Network 2. Device B will become Client and will be on Network 2.

- On 6 Device (Bridge to Client)

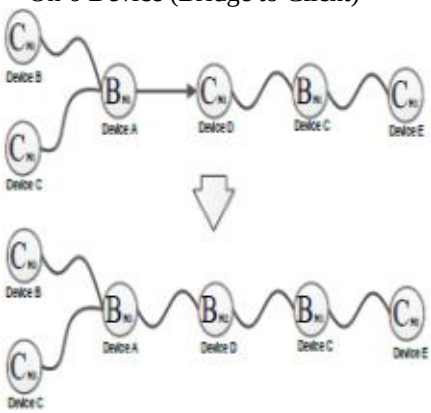

Figure 4.11 Bridge to Client Connection (6 devices)

Device A that is a Bridge and on Network 1 will connect on Device D which is a Client and on Network 1. Device A will become Network 3 and will remain Bridge. Device B and Device C will

become Network 3. Device D will be on Network 2 and will be a Bridge. Device C will remain in Status.

f. For Client to Client Connection:

- On 4 Devices

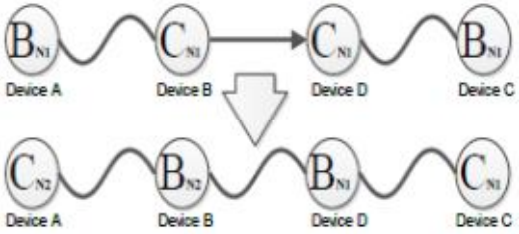

Figure 4.12 Client to Client Connection (4 devices)

Device B will connect on Device D, they are both Client. Device B will be on Network 2 and will become Bridge. Device A will become Client and will be on Network 2. While Device D will become Bridge and will remain in Network 1, Device C will become Client and still on Network 1.

- On 5 Devices

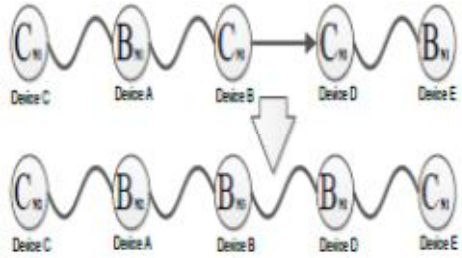

Figure 4.13 Client to Client Connection (5 devices)

Device B connects to Device D, they're both Client and Network 1. Device B becomes Bridge and its network address will become Network 3, and Device A will be Network 2 and the network address of Device C will become Network 2 while Device D will become Bridge and Network 1 and Device E will become Client and its network address will be Network 1.

- On 6 Devices

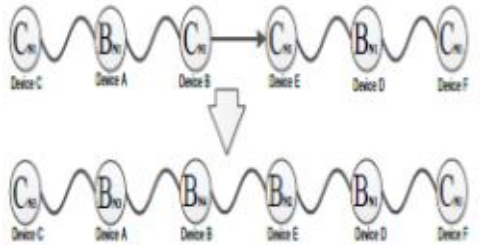

Figure 4.14 Client to Client Connection (6 devices)

Device B will connect to Device E, they are both Client and in Network 1. Device B will become Bridge and the Network Address will be on Network 4 and Device A will replace the network address.

Device A will become Network 2 while Device E will be Network 2 and be a Bridge. Device D will be on Network and will remain Bridge.

g. For In one to one connection Independent to Client Connection

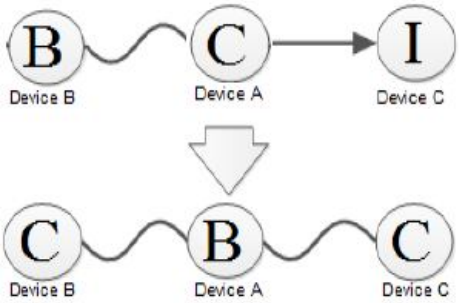

Figure 4.15 Client to Independent Connection (3 devices)

Device A connects to Device C. The status of Device A will become Bridge while the status of Device B will become Client. The status of Device C will become Client.

Table 4.1 shows the results of accuracy in building connections for each scenarios. The proponents conducted 25 trials (total attempts) for each connection. Remarks were either OK (Successful) if all the rules and settings are met or NOT in network formation. The researchers computed the accuracy of connections using this formula:

Accuracy = [Successful Connection/Total Attempts] x 100%

TABLE 4.1 BIC Tree Protocol Connections

Type of Scenarios/Connections	Number of Trials	Successful Connection Attempts	Accuracy Rate
Independent to Independent Connection	25	23	92%
Independent to Bridge Connection	25	24	96%
Independent to Client Connection	25	25	100%
Bridge to Bridge Connection (4 devices)	25	23	92%
Bridge to Bridge Connection (5 devices)	25	25	100%
Bridge to Bridge Connection (6 devices)	25	24	96%
Client to Bridge Connection (4 devices)	25	25	100%
Bridge to Client Connection (4 devices)	25	25	100%
Bridge to Client Connection (5 devices)	25	25	100%
Client to Bridge Connection (5 devices)	25	23	92%
Bridge to Client Connection (6 devices)	25	24	96%
Client to Client Connection (4 devices)	25	24	96%
Client to Client Connection (5 devices)	25	24	96%
Client to Client Connection (6 devices)	25	24	96%
Client to Independent Connection	25	25	100%

Based from Independent to Independent Connections, an accuracy rate of 92% or 23 successfully built step by step connections out of 25 trials, was gathered when forming Independent to Independent connections on two devices.
Based from Independent to Bridge Connections, an accuracy rate of 96% or 24 successfully built step by step connections out of 25 trials was gathered when forming Independent to Bridge connections on three devices.
Based from Independent to Client Connections, an accuracy rate of 100% or 25 successfully built step by step connections out of 25 trials was gathered when forming Independent to Client connections on four devices.
Based from Bridge to Bridge Connections, accuracy rates of 92% or 23 successfully built step by step connections out of 25 trials, 100% or 25 successfully built step by step connections out of 25 trials and 96% or 24 successfully built step by step connections out of 25 trials were gathered when forming Bridge to Bridge connections on four devices, five devices and six devices respectively.

Based from Client to Bridge Connections, accuracy rates of 100% or 25 successfully built step by step connections out of 25 trials, 100% or 25 successfully built step by step connections out of 25 trials, 100% or 25 successfully built step by step connections out of 25 trials, 92% or 23 successfully built step by step connections out of 25 trials and 96% or 24 successfully built step by step connections out of 25 trials were gathered when forming Client to Bridge connections on four devices, Bridge to Client connections on four devices, Bridge to Client connections on five devices, Client to Bridge connections on five devices and Bridge to Client connections on six devices respectively.

Based from Client to Client Connections, accuracy rates of 96% or 24 successfully built step by step connections out of 25 trials, 96% or 24 successfully built step by step connections out of 25 trials and 96% or 24 successfully built step by step connections out of 25 trials were gathered when forming Client to Client connections on four devices, five devices and six devices respectively.

Based from In one to one connection Independent to Client Connections, an accuracy rate of 100% or 25 successfully built step by step connections out of 25 trials was gathered when forming special case Independent to Client connections on three devices.
The maximum number of bridges the protocol can support without errors (message error) are as follows:
In evaluating problem statement 2, the proponents experimented on how many devices (bridges) the Bluetooth BIC Tree Protocol on Android Platform mobile application can handle in terms of bridging or length. The testing was intended to know the maximum number of bridges that can do message passing without a single message error. Figure 4.15 shows the visual representation of how the network was formed.

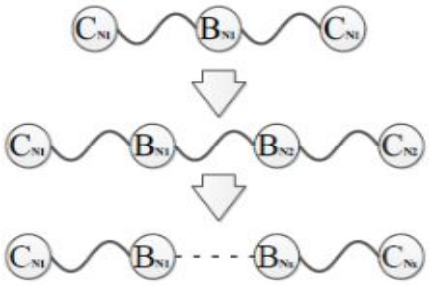

Figure 4.15 Independent to Client Connection (3 devices)

The first attempt started with 3 devices, 2 clients at both sides and 1 bridge in the middle. A message was sent every network formation from both ends. Succeeding attempts added a device on the side making the total number of bridges increase by 1 every time. This process repeats until the proponents reach the number of maximum devices they have which is 8.
Table 4.2 shows the collective results of trials for connections and messaging of different scenarios where the number of bridges used in message passing varies. The table below records the number of all devices used in each scenario, the number of devices assigned as bridge that acts as middleman and pass messages, the total number of sent, received and complete messages and the computation of its corresponding Precision, Recall and F1 Score.
The researchers computed the accuracy for message passing using the F1 score formula and to know the maximum number of bridges the protocol can handle without message errors.
P = Precision, the number of correct results divided by the number of all returned results (Complete Messages / Received Messages)

R =Recall, the number of correct results divided by the number of results that should have been returned (Received Messages / Sent Messages)

$$F_1 = 2 \cdot \frac{\mathrm{precision} \cdot \mathrm{recall}}{\mathrm{precision} + \mathrm{recall}}$$

Table 4.2 Number of Bridges and Message Passing Accuracy

Devices	Bridges	Sent Messages	Received Messages	Complete Messages	Precision	Recall	F1 Score
3	1	100	100	100	1	1	1
4	2	100	100	100	1	1	1
5	3	100	100	100	1	1	1
6	4	30	30	30	1	1	1
7	5	10	10	10	1	1	1
8	6	9	8	8	1	0.89	0.94

Based from Table 4.2, Number of Bridges and Message Passing Accuracy, the researchers gathered a total of 100 trials each for devices ranging from 3 to 5 or bridges ranging from 1 to 3. The researchers gathered a total of 30 trials each for 6 devices or 4 bridges. On the other hand, the researchers gathered only a total of 10 trials each for 7 and 8 devices or 5 and 6 bridges respectively. The number of trials was based from how often a scenario was established. It was a collection of tests done when forming different scenarios with the same number of devices, bridges and network formation. The proponents used to test the message passing capabilities of the BIC Tree Protocol when forming connections. Not all successful connections lead to successful message passing and vice versa.

The proponents computed the accuracy using F1 score to know the maximum number of bridges that can handle message passing without message error. The proponents knowing the accuracy for message passing allowed them to tell if there is an occurrence of error. Having a value of 1 on the F1 score tells that the messaging is accurate and no message error occurred. The researchers exhausted the experiments up to 8 devices only due to scarcity of resources.

As seen on Table 4.2, an F1 score of 1 was calculated from devices ranging 3 to 7 or bridges ranging from 1 to 5. The number of bridges that can do message passing without errors ranged from 1 to 5, have 5 as the maximum number of bridges. Error free message passing occurred from a bridge to 5 with a perfect precision, recall and F1 score of 1. With a total of 6 bridges, 1 out of 9 trials resulted with a failure on message passing having a perfect precision of 1, a 0.89 recall and 0.94 F1 score.
Figure 4.16 Shows the accuracy rate of message passing among different number of bridges.

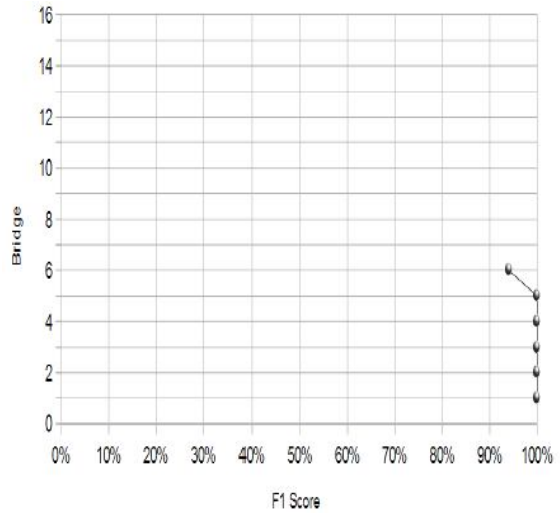

Figure 4.16 Bridge Message Passing Graph

Based from the figure 4.16, the proponents derive the following formula:

$X_1 = 100$, $Y_1 = 5$

$X_2 = 94$, $Y_2 = 6$

Find the slope (m)

The proponents want BIC Tree protocol a not less than 50% chance of error.

x = 50

$$y = \frac{(130 - 50)}{6}$$

$y = 13.33$

Therefore, the maximum number of bridges the BIC Tree Protocol can support with not more than a 50% chance of error is 13 bridges.

CONCLUSION AND FUTURE WORKS

In this study, the researchers used the BIC (Bridge, Independent, and Client) Tree Protocol as their tool for study [24]. It is a tool which utilized the vast Bluetooth technology and the Android Platform. Based from the findings of the study entitled "Bluetooth BIC Tree Protocol on Android Platform" the proponents reached the following conclusion through a series of experiments and tests.

The graph below tracks the accuracy rate of passing messages as the number of bridges increases.
Given:

$$m = \frac{Y_2 - Y_1}{X_2 - X_1}$$

then,

$$m = \frac{6 - 5}{94 - 100}$$

$$m = -\frac{1}{6}$$

Using two point form:

$y - y_0 = m\,(x - x_0)$

$y_0 = 5$, $y_0 = 100$;

then,

$$y - 5 = -\frac{1}{6}(x - 100)$$

$$y = \frac{100}{6} - \frac{x}{6} + 5$$

$$y = \frac{130}{6} - \frac{x}{6}$$

$$y = \frac{130 - x}{6}$$

The accuracy of the system when establishing connections and performing step by step procedures based from the experiments done by the researchers on android devices was proven accurate with a rate ranging from 90-100%. The maximum number of bridges the protocol can support without errors (message errors) is 5 bridges. The range 1-5 bridges can guarantee a complete connection and message passing. Theoretically, the proponents' application

can support more than 13 bridges but the proponents don't have chance to test it because of device scarcity. The more number of bridges the message needs to travel, the more prone the connection and messaging to delay and errors.

With the ideal results of the study, this idea of Bluetooth and network formation is a good research direction and further developments and improvements can be accomplished for building ad-hoc networks [25].

The current trends for Bluetooth today are too many to cover if it is to succeed as a technology for building adhoc networks [26]. This paper was intended as a brief introduction to the many challenges that the Bluetooth Technology faces and also gives a small description of work that had been done in this area. The proponents have described some of the issues that need to be tackled and that have been left unspecified by the current standards. This study is just an introduction to Bluetooth technology and its wide field of study including network formation. The proponents finished the plan up to disconnection but the tool doesn't have it. The researchers recommend finishing the BIC Tree Protocol up to its disconnection features. The proponents also recommend exploring other applications of BIC Tree Protocol just like Robotics having it in the network formation and Bluetooth as a communication medium [27].
Finally, the proponents recommend considering transferring larger message files. Up to now, the tool can only transfer a string of messages. Larger files include video and voice.

REFERENCES

[1] Schliglik, C., Barnes, S. J., Scornavacca, E., & Tate, M. (2004, December 31) Mobile Entertainment Services in New Zealand: An Examination of Consumer Perceptions Towards Games Delivered via the Wireless Application Protocol

[2] Nokia white paper, Overview of Multiplayer Mobile Game Design [www] http://www.forum.nokia.com. Last access on 23 Feb 2007

[3] <Jimbo https://learn.sparkfun.com/tutorials/bluetooth-basics>

[4] <Julie Bort http://www.businessinsider.com/900-million-android-devices-in-2013-2013-5>

[5] James Kardach Mobile Computing Group, Intel Corporation (n.d.) Bluetooth Architecture Overview

[6] <URL Android Developer http://developers.android.com/guide/topics/connectivity/bluetooth.html>

[7] <URL http://project-swarm.co.uk/wp-content/uploads/2010/03/Comparisonofwireless-technologies.pdf>

[8] Sreenivas, H. & Ali, H., (2004) An Evolutionary Bluetooth Scatternet Formation Protocol

[9] Westermark, C., (2007, June 24) Mobile Multiplayer Gaming

[10] Pothuganti, K., & Chitneni, A., (2014) Comparative Study of Wireless Protocols: Bluetooth, UWB, ZigBee, and Wi-Fi.

[11] Donegan, B.J., Doolan, D.C. &Tabirca, S. (2007) Mobile Message Passing using a Scatternet FrameworkInternational Journal of Computers, Communications & Control Vol. III (2008), No. 1, pp. 51-59

[12] < A blog by Fred http://www.tappublisher.com/blog/Why+mobile+apps+are+so+popular%3F/26>

[13] Huang, L., Chen, H., Sivakumar, T. V. L. N., & Sezaki, K., (2005) Impact of Topology on Bluetooth Scatternet

[14] Ludwig, Sean. December 5, 2012. venturebeat.com, study: "Mobile app usage grows 35%, TV & web not so much"

[15] <Ravi Kumar http://www.icewebfilter.com/mobile-apps-popular/>

[16] Oskar Blakstad (Jun 17, 2008). Research Designs. Retrieved Sep 09, 2014 from Explorable.com: https://explorable.com/research-designs

[17] BlueHoc: Bluetooth Ad-Hoc Network Android Distributed Computing - G. Hinojos, C. Tade, S. Park, D. Shires, and D. Bruno

[18] URL http://ipv6.com/articles/applications/Bluetooth.htm>

[19] < Android http://www.android.com/about/>

[20] < Android http://developer.android.com/about/index.html >

[21] Software Engineering by Roger Pressman

[22] Basagni, Bruno and Petrioli, A Performance Comparison of Scatternet Formation Protocols for Networks of Bluetooth Devices, Proc. IEEE International Conference on Pervasive Computing andCommunications (PerCom) Texas, pp 93-103, 2005.

[23] Performance comparison of Bluetooth scatternet formation protocols for multi-hop networks - Zhifang Wang · Robert J. Thomas · Zygmunt J. Haas

[24] Jia, S., (April 2009) An Effective Solution for Bluetooth Adhoc Networking

[25] Bluetooth Scatternets: An Enhanced Adaptive Scheduling Scheme presented by Simon Baatz, Matthias Frank, Carmen K¨uhl, Peter Martini, Christoph Scholz

[26] Bluetooth Scatternet with Infrastructure Support:Formation Algorithms given by Tatiana K. Madsen, Fjolnir Gudmundsson, Stefan Sverrisson, Hans P. Schwefel and Ramjee Prasad

[27] R.Dhaya, Dr.V.Sadasivam, Dr.R.Kanthavel Lecturer, National Engineering College, Kovilpatti, Tamilnadu ,India. Professor, M.S.University, Tirunelveli, Tamilnadu, India.

About the Authors:

Mike Joseph Villafuerte is a graduate of Computer Science from Polytechnic University of the Philippines. He is on the Computer Networks Engineering track and has knowledge on Cisco Networking. He had his On-the-Job training at iRipple Inc. at 2202-C East Tower Philippine Stock Exchange Center, Exchange Road, Ortigas Center, Pasig City. He was assigned as trainee and technical writer at Barter Operations Local Team Support Unit.
Jemuel Isidro Elimanco is a graduate of Computer Science from Polytechnic University of the Philippines. He is on the Computer Networks Engineering track and has knowledge on Cisco Networking. He is a programmer with skills on C, Python, Java and a web developer with skills on PHP, HTML and CSS.
John Lester S. Concon is a a graduate of Computer Science from Polytechnic University of the Philippines. He is on the Computer Networks Engineering track and has skills on Cisco Networking. A programmer with skills on C, Java,

and Web developing. He is yet to have an On-the-Job training this summer of 2015.

Manolito C. Bañasia Jr. is a graduate of Computer Science Student from Polytechnic University of the Philippines. He is on the Computer Networks Engineering track and has knowledge on Cisco Networking. He had his On-the-Job training at Department Of Finance at DOF Bldg., BSP Complex, Roxas Blvd., 1004 Metro Manila. He was assigned as trainee and network, software and hardware troubleshooting at Management of Information System (MIS).

Michael dela Fuente is an assistant professor and currently the Chair of the Computer Science Department of the College of Computer and Information Sciences at the Polytechnic University of the Philippines. He obtained her Masters of Science in Global Information Technology at Waseda, Japan.

Dr. Iluminada Vivien R. Domingo is a full professor at Polytechnic University of the Philippines She took up Bachelor in Business Education, Magna Cumlaude, 1986 from the Polytechnic University of the Philippines. She received her Master's in Business Administration from University of Santo Tomas in 1990 and her Doctor in Business Administration from Polytechnic University of the Philippines in 2004.

★★★