A STUDY ON THE IMPROVEMENT OF ERROR DETECTION AND POWER EFFICIENCY PERFORMANCE IN ELECTRICAL MUSCLE STIMULATOR

[1]YOUNGHUN JUNG,JUNHYUNGYANG [2]DOOHEE JUNG

[1,2]Korea Polytechnic University,Korea
E-mail: [1]reverti890@gmail.com,Jhyang126@gmail.com [2]doohee@kpu.ac.kr

Abstract- In this paper, we propose a method to detect the error and to reduce the power loss in the constant-voltage method of EMS by measuring the user impedance. Instead of the switching feedback circuit, ADC feedback circuit is used to increase the error detection performance and power efficiency of the battery operated portable EMS circuit requiring miniaturization. Experimental works show the effectiveness of the proposed method. It is expected that our method can be extended for the body fat measurement.

Keywords- Electrical Muscle Stimulator, Constant Voltage, Power Efficiency, Error Detection, ADC Feedback

I. INTRODUCTION

EMS(Electrical Muscle Stimulator) is an electrical muscle stimulation device that enables artificial muscle contraction through electric signal to induce the contraction exercise of the actual muscle, and it was developed in the 1960's to prevent the loss of muscular strength of astronauts. Today, EMS is used in various fields including medical treatment, rehabilitation training, low-frequency massage apparatus, and exercise equipment.

EMS is largely divided into constant-voltage method and constant-current method. In the constant-current method, the depolarization of the skin layer is occurred according to the strength of the current, therefore, it has excellent reliability and performance. Meanwhile, in the constant-voltage method, the strength of the current is determined according to the impedance of the skin, so the performance is degraded.[1]. However, to increase the portability through miniaturization, the constant-voltage method is more favorable, and the performance can be improved by measuring the impedance to change the voltage.

In this paper, the method of improving the error detection and power efficiency from the measurement of impedance on the portable EMS is provided. The proposed method can reduce the power loss occurred on the conventional detection unit. So it can extend the usage time of the battery in the portable EMS system. In addition, by measuring the impedance of the user's electrode during the exercise, identifying the level of adhesion and informing it to the user, accidents from burn or electric shock due to overvoltage and overcurrent can be prevented.

II. ADC FEEDBACK CIRCUIT

2.1. Impedance Estimation

<Figure 1> shows the block diagram of the constant-voltage method of EMS circuit.

EMS is largely composed of the boost converter circuit increasing the output voltage, the switching circuit that ON/OFF the voltage to deliver the stimulation to the user, and the switching feedback circuit that inspects the detachment and attachment of the electrode. Through the switching feedback circuit composed of the resistance R_{sense} and the transistor for detection, by checking the output level of the transistor according to the stimulation waveformpattern[3],the open state of the electrode can be simply detected.

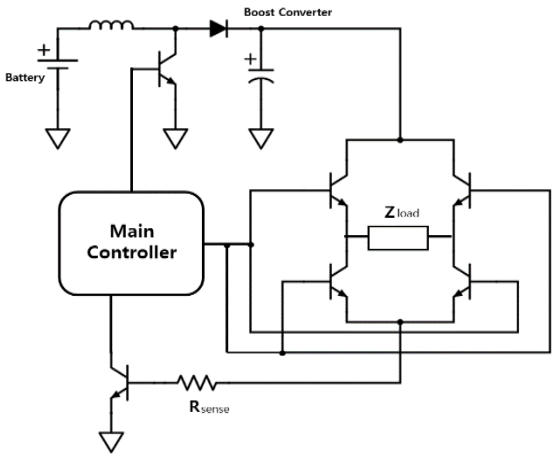

Fig 1. Block diagram of constant-voltage method EMS circuit

<Figure 2> shows the block diagram of the proposed ADC feedback-based EMS circuit.

In the proposed method, when the divided resistance having high resistance value (MΩunit) isused to compose the ADC feedback circuit, the user impedance can be estimated by using simple formula. The impedance changes according to the electrode adhesion form, level of adhesion and adhesion area. Therefore,by monitoring the change in the impedance of the user during the exercise to verify its electrode

state, safety accidents such as electric shock or burn can be prevented.

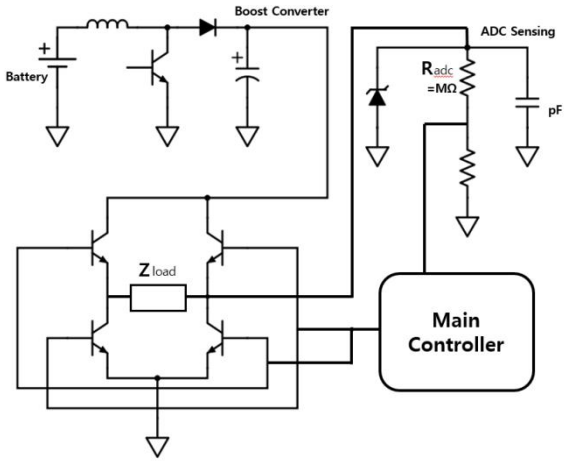

Fig2. Block diagram of the proposed ADC feedback-based EMS circuit

Moreover, the impedance is different according to the physical characteristics and skin condition of the user.[2] This impedance can be an index that can identify the physical characteristics of the user, and also a criterion fordetermining the level of the boosted voltage. In the conventional EMS, the level of the boosted voltage is determined by using trial and error. Since precise impedance value can be calculated through impedance estimation, we can usethe calculated impedance to determine the level of boosted voltage for improving the performance and power efficiency.

2.2. Power Efficiency

In the switching feedback circuit of <Figure 1>, power lossesoccur at the boost converter circuit, the H-Bridge switching circuit for producing stimulation waveform pattern, the R_{sense} resistance connected to the transistor in series.And the boosted voltage is determined by the experimental modeling data regardless of the change in the impedance to reduce the power efficiency.

Meanwhile, in the ADC feedback circuit of<Figure 2>, where the dividing resistance with large value of MΩ unit for ADC is connected in parallel to the boost converter circuit and the H-Bridge circuit, the power loss can be reduced and high stimulation performance can be achieved with lower level of the boosted voltage. In addition, the boosted voltage can be regulated by using impedance estimation, therefore, the battery power can be used efficiently.

3.2. EXPERIMENTAL RESULT

<Figure 3> shows the sensing voltage for different load impedance (510Ω and 1020Ω).

Due to the voltage drop of upper transistor of H bridge circuit, voltage level of one side of electrode is much lower than that of booster output in the case of Z_{load}= 510Ω.By checking the voltage drop and voltage level of the waveform, we can estimate the impedance.

To remove the effect of boosting circuit, boosting operation is disabled during sensing operation for impedance estimation. Meanwhile, to avoid performance degradation in constant-voltage operation, sensing operation for impedance estimation is inserted less frequently than normal sensing operation for detachment.

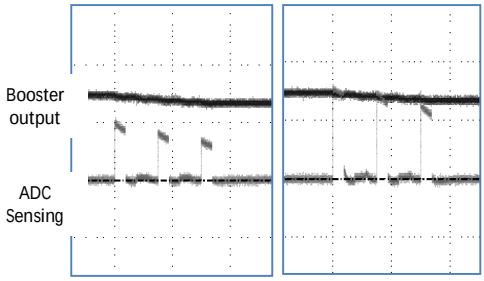

20V/div, 500us

(a) Z_{load}= 510Ω(b)Z_{load}= 1020Ω

Fig 3. Graph of the sensing voltage for different load impedance

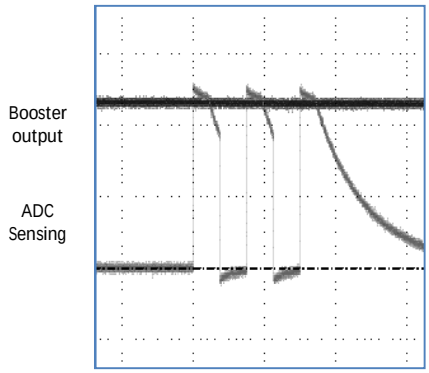

20V/div, 500us

Fig 4. Graph of the sensing voltage for detachment

<Figure4> shows the sensing voltage for detachment., where we can see no voltage drop occurs during ON state of the upper transistor of H bridge. Since sensing operation of detachment is not affected by the operation of booster circuit, boosting operation for constant-voltage can be enabled

<Figure5> and<Figure6> show the comparison of the boosted voltage of the boost converter and the electrode output voltage of the switching feedback circuit of the conventional EMS circuit and the proposed EMS circuit.

To deliver same level of voltage to the electrode, the proposed EMS circuit where ADC feedback circuit is connected in parallel with dividing resistance of high value has little power loss in sensing.Therefore, most of the power in the boost circuit can be delivered to the electrode.

In addition, the conventional switching feedback circuit can detect only the switching state of the transistor, so the analog value of the boosted voltage cannot be identified. Therefore, it generates same boosting pattern without knowing the value of

electrode impedance, and the level of the boosting voltage can only be determined using trial and errorto generate different electrode output voltage for each user.

Meanwhile, the ADC feedback circuit can estimate the user impedance and determine the appropriate value of the boosted voltage.And the output current can also be calculated by the output impedance and the boosted voltage values. Therefore, the level of the boosted voltage can be determined according to the different load impedance of each user, and the electric stimulation output can be adjusted not only with the amount of voltage, but also with the amount of current.

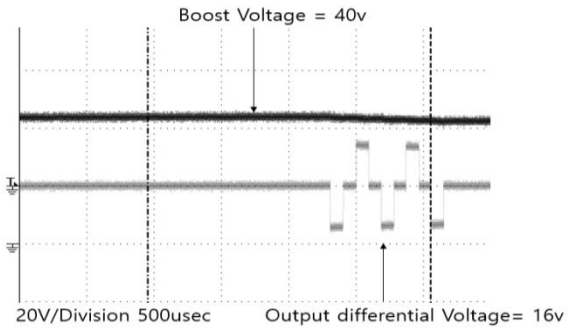

Fig 5. Boosted voltage and output wavefrom of the conventional EMS circuit

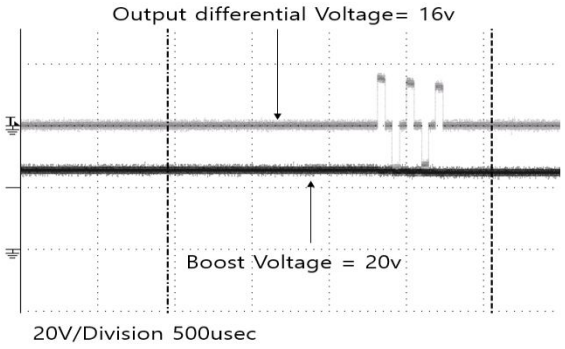

Fig 6. Boosted voltage and output waveform of the proposed EMS circuit

CONCLUSIONS

In this paper, the ADC feedback circuit EMS controller was proposed instead of the switching feedback circuit. Experimental works shows that efficiency of the proposed and that the constant voltage operation can be achieved regardless of the detachment/attachment state and user impedance.

The proposed method monitors the estimated impedance to not only verify the detachment/attachment of the electrode, but also the adhesion level of the electrode to increase the exercise effect, and to prevent accidents such as overvoltage, overcurrent and burn due to inappropriate electrode attachment.

It is expected that when the proposed method is applied to the case of attaching electrodes to the body, it can be utilized in measuring the physical characteristics of the user such as the body fat and muscle mass, etc.

“This research was supported by the MSIP(Ministry of Science, ICT and Future Planning), Korea, under the ITRC(Information Technology Research Center) support program(IITP-2016-H8601-16-1003) supervised by the IITP(Institute for information & communications Technology Promotion)”

REFERENCES

[1] M. John McNulty, “Design of Highly Efficient Circuit for Electrical Muscle Stimulation” University of Limerick, 2006

[2] J. G. Webster, Medical Instrumentation, 3rd edition,. NewYork : John Wiley & Sons, 1998

[3] M. Knaflitz and R. Merlertti, “Suppression of Simulation Artifacts from Myoelectric-Evoked Potential Recordings” pp. 6, 1988

★★★