THE FACTORS OF THE INTERNET CELEBRITIES INFLUENCING THE CHINESE CONSUMERS ON THE DEMAND FOR THEIR PRODUCTS

[1]PU HUANG, [2]ANUPHAK SAOSAOVAPHA, [3]CHUKIAT CHAIBOONSRI

[1]Faculty of Economics, Chiang Mai University, Chiang Mai, Thailand
E-mail: [1]huangpupu09@gmail.com, [2]anuphak@gmail.com, [3]Chukiat1973@gmail.com

Abstract - From the empirical point of view, this study proposes the research hypothesis and model of the research on the development of the internet celebrity economy, and the research status of consumer purchasing decisions, combined with the empirical research of some researchers and designs the questionnaire and scale. The factors affecting consumer purchase decisions under the Internet celebrity economy were analyzed. At the end of the whole thesis, combined with the research process and research results, some suggestions were put forward for internet celebrity group, internet celebrity economy, internet celebrity fan consumers, and the research shortcomings and prospects of this study were summarized.

Keywords - Internet Celebrity, Marketing, Consumer Purchasing Decision

I. INTRODUCTION

In recent years, with the development of the IP industry, the number of Internet users in the world creased dramatically. Celebrities such as Justin Bieber and Katy Perry who have over 100 million followers on Twitter (Twitte Counter, 2017). By 2018, about 828.5 million people had access to the Internet in China, of the around 3.9 billion Internet users worldwide as of 2018, China accounted for more than 20 percent (Influencer Marketing Hub 2018). With the Internet economy is developing faster and faster, the internet celebrity became a hot topic. Secondly, as the number of users of online social network sites (SNS) has been increasing exponentially, it can be said that the spontaneity and emotionality of Internet group communication is the catalyst that promotes the Internet celebrity to become popular rapidly. Along with the outbreak of the Internet celebrity economy, and the rapid expansion of the live broadcast industry and technology, the new Internet economy has shown a diversified development pattern. Internet celebrities need to rely on the spread of social networks to output valuable content to obtain a fan's attention.

Through the above description, the rest of the study is organized as follow, section 2 is literature reviews, section 3 is the data source and theoretical. Section 4 provides methodology and empirical results. And the last part is a conclusion.

II. LITERATURE REVIEW

2.1 The Internet celebrity economy

The Internet celebrity economy is a product of the increasing number of celebrities on the Internet and the increasing commercial profits based on the celebrity effect. First of all, this study will mention the definition and classification of the Internet celebrity economy. The phenomenon of Internet celebrities increases their popularity using anonymity (Gamson, 1994; Rowland,2008). Therefore, the multifaceted influence of Internet celebrities on consumer decisions makes them a key research topic for marketing managers and scholars to investigate and find more effective marketing applications (Gamson, 1994;Rojeck, 2001, 2012; Rowlands, 2008; Turner, 2013).

Peter YANG (2015) When the Internet celebrity effect is gradually developed from the pure Internet language or Internet relationship to the economy and commodities, the ensuing consumption and economic changes will start quietly. Nan JIA (2015), converting fans trust the Internet celebrity economy "is a kind of economic form of the purchasing power of the thought in the context of the Internet celebrity economy, social media gives fans a variety of rights, state of the Internet celebrity hair contains both browse comments right, also give their Suggestions on the Internet celebrity shop goods production rights.

2.2 Factors behind consumers' buying behavior under the Internet celebrity economy.

According to Armstrong and Kotler (2003), consumer buying behavior represents a single person's or family's belongings and used services that they have bought for their own purposes. Investigation of influencing factors in consumers' buying behavior expanded in 1998 since online sales increased widely (Loshe, Bellman & Johnson 2000).

Consumers' Purchasing Decisions

In general, the purchase decision of consumers is a process that needs to be considered before consumers consume. If we know every part of consumers' consumption behavior, we can know how consumers' purchase decision is affected.

The EKB Model

EKB model, also known as Engel model. This theoretical model of consumer behavior was first proposed by Engel and Kola Blackwell in 1968 and

revised in 1984. Consumer decision-making models are divided into five steps: awareness, inner study and choice of evaluation, evaluation, purchase process, and to explore the selection results (including buy after evaluation and future behavior) 15, consumers in the shopping process information, the cognitive and form the attitude of the intention of required products will affect final shopping decisions.

According to the EKB model, the factors that will influence the five steps of consumers' purchasing decisions include personal factors and environmental factors. Individual factors include information and experience of central control system response, evaluation criteria, attitude and personality, as well as the processing of stimulus factors in the information processing stage, and environmental factors include income, culture, family, social material class and so on. These will directly or indirectly affect the decision-making process of consumers.

III. DATA COLLECTION AND VARIABLES

3.1 The data collection

This study will explore the Internet celebrity under the economic factors and the relationship between customer demand for products, structural equation model (SEM) using a Likert scale, the questionnaire will be collected from 400 consumers. With the help of factor analysis, the scale of this study identified four dimensions: cognitive attitudes influence on consumer demand, emotional attitude to the influence of consumer demand, brand and para-social relationships affect consumer product consumption.

By using Taro Yamane (Yamane,1973)formula with a 95% confidence level, the sample of this research is calculated. To determine the sample size of this study, the calculation formula of sample size by Taro Yamane(1968)is as follows:

$$n = \frac{N}{1 + Ne^2}$$

Where n=sample size required

N= number of people

e =allowable error (%)

After calculating the sample size, to obtain reliable data, the sample size will be set as 400 respondents. To test the relationship between cognitive attitude, emotional attitude, brand awareness, social relations and consumer demand for products in the network economy, this study will adopt the structural equation model and conduct a questionnaire survey on 400 consumers who have had watched the Internet celebrity publicity already, and that survey will be done by the primary data.

3.2 Variables used in the study

In this study, X is an independent variable and Y is a dependent variable. Both X and Y represent observation variables, in terms of SEM, this study also using X denoted latent independent variables and latent dependent variables using observed variables denoted by Y.

The latent variables which are the variables cannot be measured directly and these variables are defined by a set of observed variables that can be measured directly. This study using the proper variables to include in the theoretical model, That the model specification is the first step of SEM analysis. The theoretical model of this study is composed of relevant research, theories, and useful information, thus establishing the theoretical model of this study.

External latent variables	External observed variables
Emotional	Idol contribution(X1)
	Content quality(X2)
	Idol personal charm(X3)
	believe (X4)
Para-social	Empathy(X5)
	Loneliness(X6)
	Low self-Esteem(X7)
Cognition	Source of Information(X8)
	Internet Experience(X9)
	Reference Groups(X10)
Brand	Preferences(X11)
	satisfaction(X12)
	Attitudes(X13)
	Popularity(X14)

Table 1: External latent and observable external variables used in the study

External latent variables	External observed variables
Demand for purchase	Price(Y1)
	Package(Y2)

Table 2 Internal variables and observable internal variables used in the study

3.3 Hypothesis of the Study

Cognition 1:

H1: Consumers' cognitive attitude positively influences their purchase intention

H2: Consumers' cognitive attitude negatively influences their purchase intention

noitomE2

H3Consumers' emotional attitude positively influences their purchase intention

H4: Consumers' emotional attitude negatively influences their purchase intention

Brand 3

H5 :Consumers' brand awareness positively influences their purchase intention

H6: Consumers' brand awareness negatively influences their purchase intention
Para-social4
H7: Consumers' parasocial-relationship positively influences their purchase intention
H8: Consumers' parasocial-relationship negatively influences their purchase intention

IV. METHODOLOGY AND EMPIRICAL RESULTS

In the book "consumer psychology", it is pointed out that the samples of quantitative research should be more than 400 so that the obtained data can be highly valid. The questionnaire for this study was sent on WenJuanxing (an online crowd sourcing platform in China) and distributed through many channels in the form of links. A total of 531 were recovered, of which 481were valid questionnaires. Now the valid sample data are analyzed and tested.

Demographic variable	Clauses	Number of people	The percentage (%)
Gender	man	260	54.05
	woman	221	45.95
Age	Under 20	7	1.46
	20-25	334	69.44
	26-30	80	16.63
	31-35	4	0.83
	More than 35	56	11.64
Average monthly disposable amount	Under 1500	12	2.49
	1500-2000	180	37.42
	2001-2500	132	27.44
	2501-3000	78	16.22
	More than 3000	79	16.42
Degree Level	High school or lower	10	2.08
	Junior college	12	2.49
	Bachelor degree	446	92.72
	Master degree	11	2.29
	Doctor degree or above	2	0.42
What kind of the Internet celebrity do you watch?	Talent show	148	30.77
	Food live	323	67.15
	Beauty bloggers	442	91.89
	Sports live	82	17.05
	Game live	359	74.64
	others	143	29.73
Occupation	student	313	65.07
	State-owned &public institutions	140	29.11
	Private enterprise	14	2.91
	Freelance	4	0.83
	others	10	2.08
Have you ever heard or watched the live broadcast of online celebrities selling products	Never heard about that	4	0.83
	Have heard but never watch	89	18.5
	Have watched but not bought	76	15.8
	Have watched and bought	312	64.86

Table 3. Demographic Information Results:

As shown in Table 3, more men (54.05%) than women (45.95%) were surveyed, and 69.44% of respondents aged 18-40 were active users of social networks. Most of the respondents had a bachelor's degree (92.72%).
The method of factor analysis in SPSS to measure the quality of the model is exploratory factor analysis, which is to directly analyze the data and then analyze whether the results are consistent with the assumed model. Factor analysis in AMOS is confirmatory factor analysis. In AMOS25.0, the hypothesis model is first drawn and then the collected data is substituted in for testing.
Draw the figure according to the model assumed in this study:

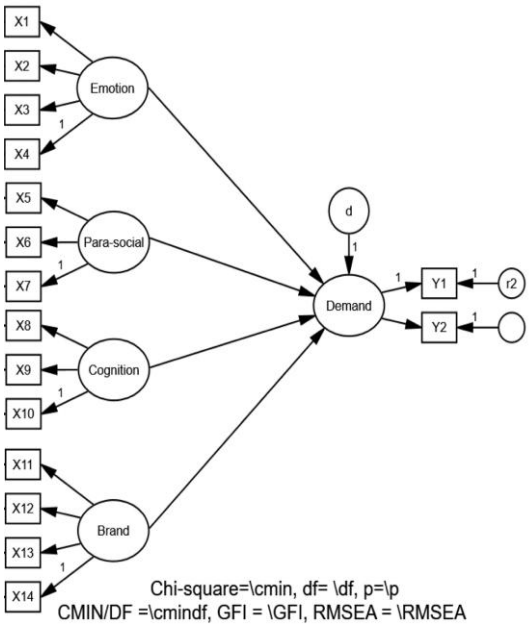

Fig 1 Conceptual Framework

AMOS (Analysis of Moment Structure) software is utilized to develop a "User Satisfaction Model for Transit Service", in which basic service, supplementary service, internal environment service, external environment service, staff/human service, transfer service are employed as exogenous latent variables and overall user satisfaction as an endogenous latent variable, respectively. Various goodness-of-fit measures are tested for developed models, which are summarized in Table 4. As shown in Table 5, values calculated of Chi-squares, CMIN/DF, GFI, and RMSEA are above the critical values Hence goodness-of-fit of models developed in this study is statistically accepted.
After importing the data of 400 questionnaires, the fitting degree of the structural equation was evaluated. The indexes of the overall model fitting degree also include the index of absolute fitting degree, the index of value-added fitting degree and the index of comprehensive fitting degree. After importing the data and running the model first times, we get the first model:

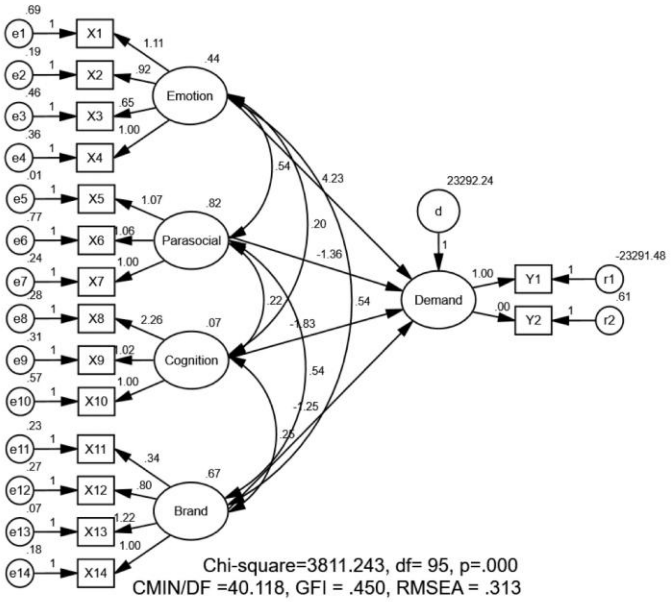

Fig 2 SEM for factors affecting Chinese consumers under the Internet celebrity economy (First Test)

As can be seen from Fig.2, the degree of freedom of the model is 95（Degree of freedom refers to the number of independent or freely varying independent variables in the sample when the parameters of the population are estimated by the statistics of the sample. It means a degree of instinctive freedom of choice. When there's only one left, it can't be free anymore, so it's n minus one degree of freedom.）, the chi-square value of the fitness degree is 3811.243, and the significance probability value P=0.000 is less than 0.05. The null hypothesis is rejected. CMIN is a macro function of difference. The difference is the chi-square value, which can check whether the model is suitable for the data. When the data is completely suitable, the difference value is 0; When the model does not fit the data, the difference is infinite. The difference value of the saturation model in the above table is 0, indicating that it is completely suitable for the data model. The difference between the present model and the independent model is large, which indicates that the degree of fitting with the data is not good. P is significant. The significance of the present model and the independent model was less than 0.05, indicating that the model was not properly fitted with the data. CMIN/DF is the difference divided by the degrees of freedom. The closer to 0, the better the fit between the model and the data. Generally, the value is 2, and the value of CMIN/DF is 40.118, which is much higher than 2, indicating that the fitting degree between the model and the data is not good. RMSEA= population difference/degree of freedom, which is the approximate error root mean square, and represents the difference between the hypothesis model and the saturation model. When RMSEA is less than 0.05, it can be judged that the fitting degree of the model is good; when RMSEA is greater than 0.1, it represents the poor fitting degree of the model. The RMSEA of the preset model is .313, which is greater than 0.1, and the fitting degree of the model is not good.

GFI is the goodness of fit index. The closer GFI is to 1, the better the model fitting degree is. GFI> 0.9 is usually used to measure the model. The GFI of the preset model is equal to .45 <0.9, indicating that the fitting degree of the model is not good.

4.1 Modified Model

When the Model effect is very poor, according to the results of the initial Model parameters of significant and Amos Model correction indexes Model Building or Model limit Model Trimming. Model extension refers to releasing some restricted paths or adding new paths to make the model structure more reasonable. Model constraints are used to make the model structure more concise by removing or restricting partial paths and are often used to improve model identifications. AMOS provides two model Modification indexes, wherein Modification Index is used for model expansion and the Critical Ratio is used for model limitation. The correction index is used for the model extension. It refers to the minimum chi-square value that will be reduced when the model is improved if the free estimation is allowed for some restricted parameter in the model (such as adding a path in the model). When using the modified exponential to modify the model, in principle, only one parameter is modified at a time, and the estimation starts from the maximum value. However, in practice, it is also necessary to consider whether there is a theoretical basis for the parameter to be freely estimated. The data of the modified index include the covariation relation between the added variables and the added path coefficient. The correction index of the model represents the value that the overall chi-square value of the model can be reduced after changing a

fixed or restricted parameter into a free parameter that can be estimated. The expected parameter change value represents the value that the parameter may change when it is released. A large correction value only makes sense when it is released if it matches a large expected parameter change value. It is generally believed that correction is necessary only when the correction index is greater than 3.84 because releasing a parameter will reduce one degree of freedom, and when df=1, α =0.05, The critical value of $X^2_{0.95(1)}$ is 3.84, so if the correction index value is greater than 3.84, the value is significantly larger.

Now consider modifying the model by modification index (ML). After the model is modified, figure 3 is obtained

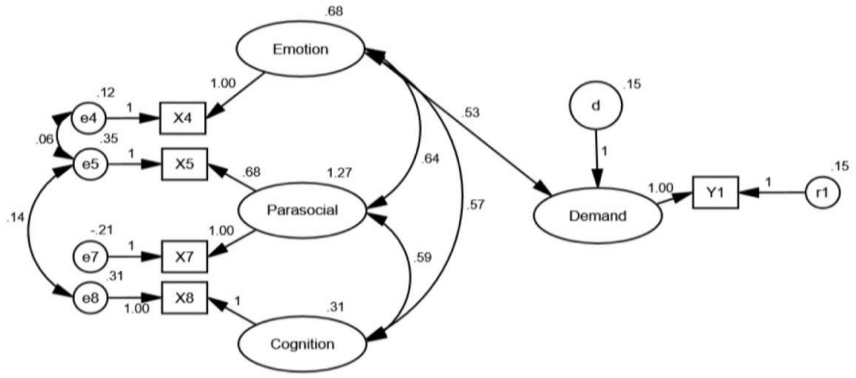

Chi-square=4.006, df= 1, p=.045
CMIN/DF =4.006, GFI = .996, RMSEA = .087

Fig 3 SEM for factors affecting Chinese consumers under the Internet celebrity economy

Measures	Chi-square	CMIN/DF	GFI	RMSEA
Value	4.006	4.006	.996	.087

Table 4 Goodness-of-fit Measures for Models

By comparing FIG. 2 and FIG. 3, it can be seen that the chi-square value decreases a lot, and the fitting indexes are improved greatly.

By comparing FIG.1 and FIG.3, it can be concluded that emotional attitude has a direct impact on consumers' purchase intention. At the same time, para-social and cognitive attitudes are all related to emotional attitude. Also, under the Internet celebrity economy, brands cannot directly affect consumers' demand. Above all, H3 is true, and the other hypothesis is not true.

Result Interpretation

The main function of the structural equation model is to reveal the structural relationship between latent variables (between latent variables and measurable variables and between measurable variables), which is reflected in the model through the load coefficient.

4.2. Direct effect

This refers to the direct influence from the cause variable (can be exogenous or endogenous) to the result variable (endogenous variable). The direct effect is measured by the path coefficient from the cause variable to the result variable. For example, figure 3 shows that emotional attitude has a direct impact on demand.

4.3. Indirect effect

The indirect effect of a cause variable on an outcome variable by affecting one or more mediation variables. When there is onlyone mediation variable, the magnitude of the indirect effect is the product of two path coefficients.

4.4. Total effect

The total influence from the cause variable to the result variable is the sum of direct effect and indirect effect.

4.5. Analysis

From table 4, it can be seen that The chi-square value is 4.006, which is acceptable; CMIN/DF=4.006(The closer to 0, The better), which is also acceptable; GFI=.996(Scaled between 0and 1,with higher value indicates better model fit); meanwhile, RMSEA =. 087 (Acceptable threshold level is that: from a known distribution, favours parsimony. Value < = 0.03 represents excellent fit. The Value < = 0.05 represents good fit, and the Value < = 0.08 represents the adequate fit), Through these indicators, the modified model is acceptable.

From Q 1 to Q 3, the loading of emotional attitude is very small, and the modification index (ML, modification) of other factors is not high, so it is not subordinate to the potential variable of emotion, nor to other variables. After carefully checking the content of the questions, I decided to delete the three observation variables. In terms of Q6, the loading of para-social is very small, and the modification index (ML,

modification) of other factors is not high, so it is not attributed to this potential variable, nor other variables. The observation variable X6 is deleted. Q9 and Q10 have small loading in cognition, and the correction index of other factors is not high, which is not attributed to cognition (latent variable), Delete X9 and X10. And from this model, and found that Packaging doesn't significantly affect demand, just in the Internet celebrity economy, because consumers' attention is more on the Internet celebrities themselves than the packaging. The other one is the path of brand and demand is not significant, which means that in the Internet celebrity economy, the brand does not directly affect consumer demand.

To analyzes why brands cannot directly affect consumer demand in the Internet celebrity economy. The reason is that Internet celebrity originates from new media, and new media itself is only a medium that has not been completely standardized and just has a short existence. In addition to viewing it cannot bring more endorsements to brands. Being a brand that has been recommended by the Internet celebrity is like being a star overnight to attract people's attention. It brings attention, not a brand. The amount of viewing is the amount of viewing, and the brand is the brand. The brand is about trust and recognition, and viewing is just about attention.

According to the book 《the mob》 says: "groups are always in a state of low rational thinking, and the arguments they use and those that can affect them are very low-level, which can only be regarded as rational thinking by analogy". Consumers can easily fall in love with a product because of the recommendation, but people also can easily abandon a brand because of public opinion. This is the attention economy always bigger than the brand effect. The recommended brand may be very popular at the beginning, and then it may become cold. The core problem is that the marketing team advocates feelings in front of the brand, but the product has not been deeply rooted in the hearts of people, and the follow-up service has not been achieved. Therefore, even if the Internet celebrity brand to create feelings again deep, attract more fans, but they did not land to the core products of the brand, the marketing trend again fierce is also futile. A brand may depend on popularity in the early stage, but a long-term brand depends on a good reputation. And good reputation comes from high-quality products and meticulous services, including efficient operation and management, which constitute the internal is the key to the sustainable development of the brand.

V. CONCLUSION

The research conclusion is as follows:

5.1. In the marketing process of the Internet celebrities, trust has a positive and direct significant influence on consumers' emotional attitude.

5.2. In the marketing process of the Internet celebrities Empathy and Low self-Esteem has a positive and direct significant influence on consumers' para-social relationship.

5.3. In the marketing process of the Internet celebrities, the source of Information has a positive and direct significant influence on consumers' cognition.

5.4. In the marketing process of the Internet celebrities, Consumers' emotional attitude has a positive and direct significant impact on consumers' purchase demand. Meanwhile, commodity price also has a direct and significant impact on consumers' purchase demand.

SUGGESTION

Suggestions for the development of the Internet celebrity population:

1. Build KOL and enhance brand image

Brand image not only refers to the brand image of goods but also includes the image of the Internet celebrity personal IP. IP is intellectual property, which is the cultural prototype, is the brand driving force. When the Internet celebrity is IP-based, it is equivalent to its core value, the Internet celebrity can support the sales of the product. In the process of continuously improving the professionalism of the vertical field covered by it, consumers are more likely to refer to the recommendation of opinion leaders when making purchase decisions.

2. Strictly to Control the content

To ensure that the dissemination of content is positive and legal, we also have to review the quality of the content. In the era when the dissemination of content is very important, we should try our best to avoid the spread of the homogenization of content and ensure the quality of its output. As the Internet celebrity to establish their own unique labels and features, rather than simply to copy the successful model of others;

3. Maintain an active and "sticky "fan community

Just like the star's fan economy, the Internet celebrity economy can also be called the fan economy. If your content is no one to read, if no one is interacting with you, if no one is interested in your life and sharing, it is no different from the average person's dynamic, without the ability to transfer attention. The better the fan community is run, the higher the conversion rate of web celebrity will be, which means the greater the commercial value of the Internet celebrity.

4. Focus on the interests of fans

Some consumers choose to buy commodities out of their love and trust for the Internet celebrity. Therefore, the Internet celebrity has to do better, worthy of the trust of the fans. At the same time, strengthen the interaction with fans, do more fan welfare activities, take some incentives. These all contribute to a high conversion rate and a high sense of identity in a consumer context Suggestions for the development of

the Internet celebrity industry

5. Develop in combination with traditional enterprises

Should grow together with traditional enterprise, undertake resource conformity

6. Optimize the supply chain system

Whether it is the shooting and output of contents on social platforms and video platforms or the supply chain and operation of stores, the Internet celebrity companies should be controlled in every link while expanding their scale, to better safeguard the rights and interests of consumers and meet the needs of users.

7. Focus on Big Data Marketing

The era of big data makes it possible to collect and analyze consumer behavior.

8. To consumer demand as a guide

Research shows that in consumer psychological behavior, there is no phenomenon more than the consumption of popular market shock. According to the target consumers corresponding to different types of Internet celebrities, to design products. According to the marginal utility theory, it can be concluded that the phenomenon of consumers' adaptation to new goods and the diminishing marginal utility of consumption psychology is bound to occur sooner or later. Therefore, it can be explained that nowadays, Internet celebrity stores are loading new items at a fast speed, not only to improve customer satisfaction But also to maximize the market.

Advice for Internet celebrity fans consumers

9. Consumers should get more information to avoid risks
10. Choose brands and products with a good reputation
11. Make clear the right that oneself holds and the channel that can safeguard rights

REFERENCES

[1] Agrawal, J., & Kamakura, W. A. (1995). The economic worth of celebrity endorsers - An event study analysis. Journal of Marketing, Vol. 59, 56–62.

[2] Banister, E. N., & Cocker, H. L. (2013). A cultural exploration of consumers' interactions and relationships with celebrities. Journal of Marketing Management, Vol. 30, 1 –29

[3] Cai, H., Chen, Y., & Fang, H. (2007). Observational learning: Evidence from a randomized natural field experiment. American Economic Review, Vol. 99, 864–882

[4] Chung, S., & Cho, H. (2017). Fostering parasocial relationships with celebrities on social media: Implications for celebrity endorsement. Psychology & Marketing, Vol. 34, 481–495.

[5] Cohen, J. (2014). Current research on fandom, parasocial relationships, and identification. In M. Oliver (Ed.), Media and social life (pp. 142).

[6] Derrick, J. L., Gabriel, S., & Tippin, B. (2008). Parasocial relationships and self-discrepancies: Faux relationships have benefits for low self-esteem individuals. Personal Relationships, Vol. 15, 261–280.

[7] Eisend, M., & Langner, T. (2010). Immediate and delayed advertising effects of celebrity endorsers' attractiveness and expertise. International Journal of Advertising, Vol. 29, 527–546

[8] Escalas, J., & Bettman, J. R. (2015). Brand relationships and self-identity. Consumer use of celebrity meaning to repair a compromised identity. In S. Fournier, M. J. Breazeale, & J. Avery (Eds.), Strong brands, strong relationships (pp. 121–134)

[9] Keel, A., & Nataraajan, R. (2012). Celebrity endorsements and beyond: New avenues for celebrity branding. Psychology & Marketing, Vol. 29, 690–703

[10] Luo, L., Chen, X., Han, J., & Park, C. W. (2010). Dilution and enhancement of celebrity brands through sequential movie releases. Journal of Marketing Research, Vol. 47, 1114–1128

[11] Marwick, A., & Boyd, D. (2011). To see and be seen: Celebrity practice on Twitter. Convergence, Vol. 17, 139–158

[12] Reeves, R. A., Baker, G. A., & Truluck, C. S. (2012). Celebrity worship, materialism, compulsive buying, and the empty self. Psychology & Marketing, Vol. 29, 674–679.

★★★