HYBRID FORMING FOR BRANCH PART OF STEEL PIPE BY BURRING AND IRONING

[1]DAICHI UEMATSU, [2]SHINICHI NISHIDA, [3]KYOHEI OGAWA, [4]MAKOTO HAGIWARA, [5]SHOGO IMAIAND YUTAKA SATO

[1,2,3,4,5]Department of Mechanical Science and Technology, Gunma University

Abstract - This paper describes a simultaneous hybrid cold forming by burring and ironing of steel branch pipe. The pipes are used for a plant as a flow channel of gas and liquid. A burring process of pipe is generally for forming the branch. The burring process is achieved by drawing of die from prepared hole. And the branch pipe is welded to the formed pipe. This process has some problem. One is the forming limit of pipe, and the other is needed to machining the end surface to be welded. Each problemisdepending on the prepared hole shape, and the optimum prepared hole shape is required. In this study, FEM analysis was operated to estimate the optimum prepared hole shape.A burring and ironing process was performed at the same time, and a machining method that does not require the end face cutting of the branch in the subsequent process was proposed.

Keywords - Burring, Ironing, Simultaneous hybrid forming, Finite element method, Steel pipe

I. INTRODUCTION

This paper reports on the simultaneous hybrid forming by burring and ironing of branch pipe. A branch pipe is one of the parts that make up the piping system in factory piping that serves as a flow path for gas and fluid. Fig. 1 shows an overview of the branch pipe.SGP large diameter pipe is used as an example of a branch pipe.
Burring is a typical forming technique for branch pipes, and a rigid body drawing method [1]-[5] has been developed.Burring is a process of forming a branch pipe with a circular end at the periphery of an elliptical pilot hole drilled in the mother pipe, and there is a problem that it takes time and cost to cut the post process.

In addition, the pilot hole shape is often based on field experience and intuition, and it is difficult to say that it is the optimum shape.The main pipe of the SGP pipe used in this paper has a nominal diameter of 150A, a diameter of 165.2mm, a wall thickness of 5.0mm, and the target branch part has a nominal diameter of 100A, a diameter of 114.3mm, a wall thickness of 3.5mm, and a burring height of 10mm.In the burring process using a stepless die performed in the previous study, the end face of the branched part was not flat after processing, and a difference of about 1.0 mm occurred in the inner and outer burring height in the thickness direction.

If there is a difference in burring height, end face cutting is required after burring. In this study, therefore, we propose simultaneous machining of burring and ironing using a stepped die and a tapered punch. It is possible to flatten the end face of the branched part by performing ironing at the same time as burring and filling the level difference of the die.The purpose of this process is to be able to weld only in the rigid drawing process, which does not require cutting the end of the branch in a later process.

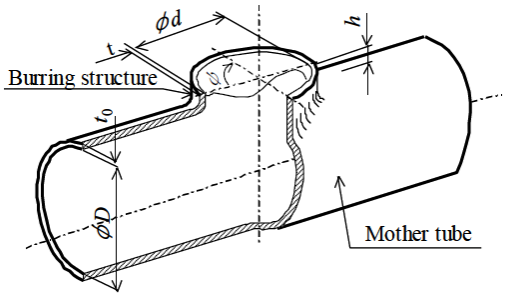

Fig.1 Overview of branch pipe [2]

II. FEM ANALYSIS

A. Analysis method

An appropriate pilot hole shape was determined by FEM analysis. The appropriate pilot hole shape was calculated by FEM analysis [6]-[10].Fig. 2 shows the FEM analysis model. The analysis model was a 1/4 three-dimensional model. A commercially available finite element method software DEFORM was used. The material was rigid plastic. Deformation resistance was AISI1010.cold data from Yamanaka Gokin Co., Ltd. The analysis is a process in which the SGP pipe is held by a die and a punch with a spherical shape is drawn from the inside of the pipe in the direction of the arrow in FIG.2. The mold has a step.A taper was provided at the lower part of the punch, and the taper part was designed to cause ironing at the same time as the burring process.By reducing the wall thickness and increasing the height of the branch, the material flows to the step of the mold, forming a flat branch end face.The bending radius was 5 mm. This is because the target burring height is 10 mm and it must be made R10 or less, so the bending radius of the branch pipe thickness is judged to be a bending radius that is unreasonable for the material. Fig. 3 shows a stepped die and Fig. 4 shows a punch drawing. Fig. 5 shows the pilot hole shape at the initial value. The punch speed was 0.1 mm/sec. Shear friction coefficient was set to 0.08.The number of set elements was 50000, and

the analysis time was about 3 hours. From the analysis results, the pilot hole shape was improved and analyzed.

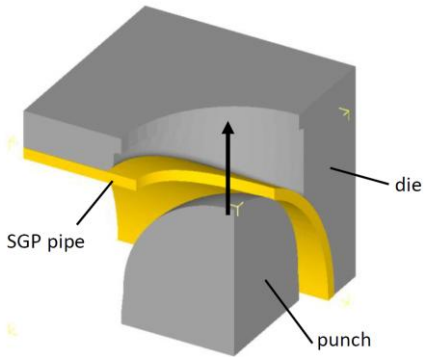

Fig. 2FEM analysis model (1/4 analysis model)

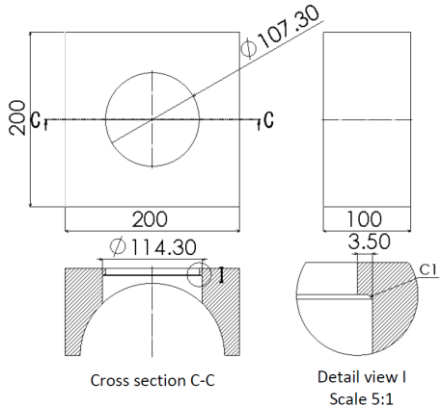

Fig. 3FEM analysis model (1/4 analysis model)

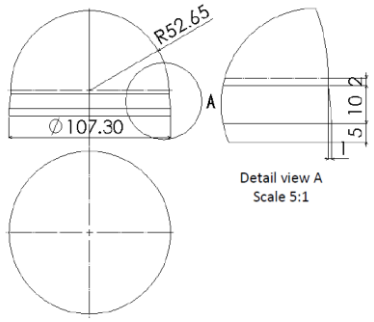

Fig. 4 Drawing of punch

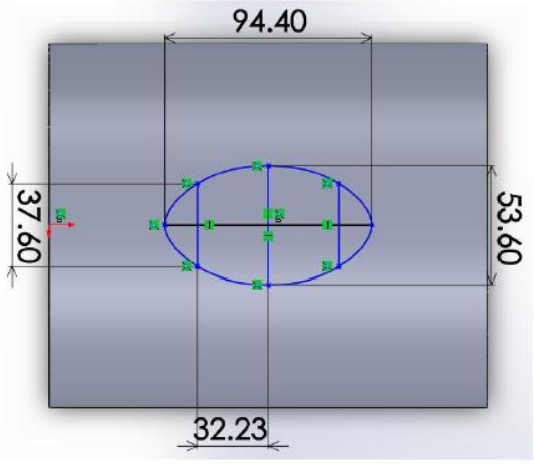

Fig. 5 Hole shape initial value

B. Analysis results

Fig. 6 shows the cross-sectional shape of the branch pipe in the analysis results performed with the initial values. From the analysis results, it was found that the inner material flow was excessive, and there was a biting part that was caught in the gap between the die and the punch, or a part that did not reach the target burring height due to insufficient material flow.If biting occurs, an excessive load is generated and the die and punch may be damaged. The pilot hole where the biting occurred was expanded in the coordinates before deformation, and the pilot hole where the barring height was not reached was shortened. By repeating this, the pilot hole shape that forms the target branch part was estimated.Fig. 7 shows the pilot hole shape with the target bifurcation shape.

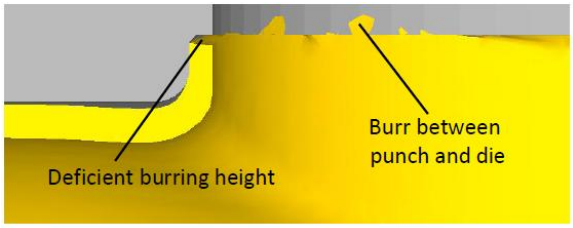

Fig. 6Cross sectional shape at initial value

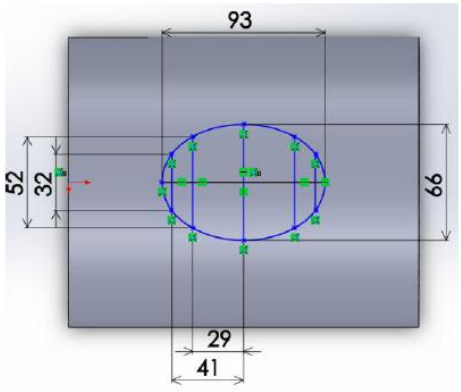

Fig. 7Hole shape of spline curve at 12point

Fig. 9 shows the results of this analysis.By using a stepped die and a taper punch, burring and ironing are performed at the same time, making it possible to form a flat branch that does not require end cutting in the subsequent process.Fig. 10 and Fig. 11 show the overall view of the pipe after the simultaneous combined machining of burring and ironing with the optimum pilot hole shape.An appropriate pilot hole shape was obtained by FEM analysis.

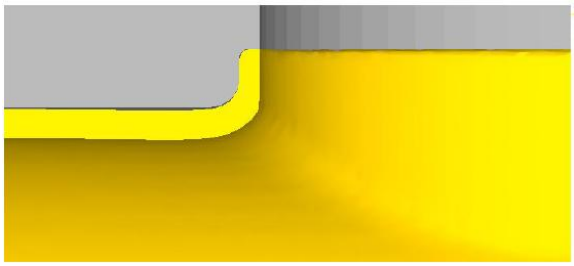

Fig. 9Cross sectional shape at using a die with step



Fig. 10Hole shape at final value



Fig. 11Hole shape at final value (Side view)

III. EXPERIMENT

A. Experimental method

A universal testing machine TENSILON (RFT-2430) was used for the experiment. Figure 12 shows the universal testing machine used in this experiment.The prepared hole shape calculated by FEM analysis was used.Figures 13, 14, and 15 show, punch, die, andthe model of the entiredie, respectively. The punch speed was 10 mm/min. A graphite lubricant was used as the lubricant.The experiment was performed by cutting the lower half of the pipe.



Fig. 12 Universal testing machine TENSILON (RFT-2430)



Fig. 13 Punch

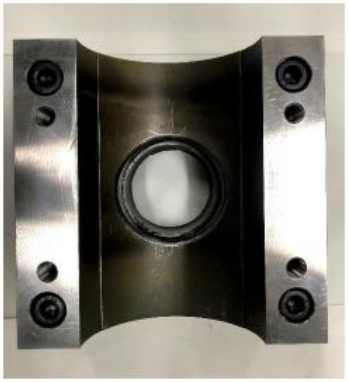

Fig. 14 Die

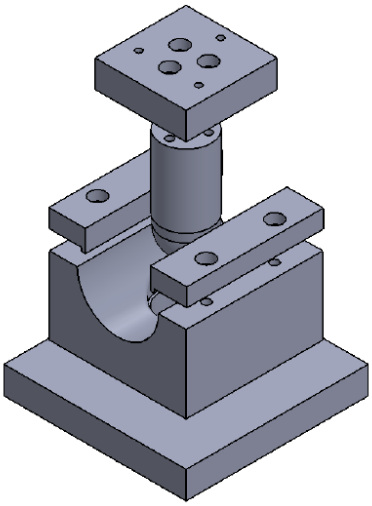

Fig. 15 Model of die set

B. Experimental result

Figures 16 and 17 show the experimental results. The end face of the branch was flattened by Simultaneous combined machining of burring and ironing. With this processing method, cutting after burring can be omitted, which leads to reduction of time and cost.



Fig. 16 Experimental result (top view)



Fig. 17 Experimental result (side view)

IV. CONCLUSION

This paper reported on the simultaneous hybrid forming by burring and ironing of branch pipe. By reducing the wall thickness and increasing the height of the branch, the material flows to the step of the mold, forming a flat branch end face.The appropriate pilot hole shape was calculated by FEM analysis. An experiment was performed using the calculated pilot hole shape.With this processing method, the end face of the branch part could be formed flat.

ACKNOWLEDGEMENT

This work was supported by the subsidy of the association for the advancement of Science & Technology, Gunma University. And this study was operated at Monodukuri Innovation Center, Gunma, Japan. And this study was supported by the Light Metal Educational Foundation, Inc..

REFERENCES

[1] K. Okada et al., Journal of the Japan Society for Technology of Plasticity, 32-364(1991), 583-588.
[2] T. Teramae et al., Journal of the Japan Society for Technology of Plasticity, 50-581(2009), 560-564.
[3] T. Teramae et al., Journal of Material Processing Technology, 191 (2007), 24-29.
[4] C. Yang et al., Journal of Materials Processing Technology 214 (2014), 2461-2467.
[5] L.M. Alves et al., Journal of Materials Processing Technology 212 (2012), 1200-1208.
[6] Japan society for Design Engineering, Practical use of 3D CAD, second ed., Corona, Tokyo, 2007.
[7] S. Nagata, J Yanagimoto, Plastic processing understood from the foundation, first ed., Corona, Tokyo, 2016.
[8] K. Asakura, H. Hashimoto, Machining method, revised ed., Kyoritsu, Tokyo, 2003.
[9] T. Ishikawa, Journal of Japan Institute of Lite Metals, Vol. 59, No. 7, (2009), 365-370.
[10] T. Ishikawa, Journal of Japan Society for Technology of Plasticity, Vol. 53, No. 620, (2012), 790-794

★★★