TECHNOLOGIES, DEVELOPMENTS AND PRODUCTION OF PHOTOVOLTAIC SOLAR CELLS AND PHOTOVOLTAIC POWER SYSTEMS

[1]WAGAH F. AL-AZZAWI, [2]MOHAMMED M. AL-SELMAN

[1]Renewable Energy Engineering Department
[2]Electrical Engineering Department
Faculty of Engineering and Technology, Philadelphia University, Amman, Jordan
E-mail: [1]wagah2000@yahoo.co.uk, [2]wfarman@philadelphia.edu.jo

Abstract - The various types of materials applied for photovoltaic solar cells includes mainly in the form of silicon (single crystal, multi-crystalline, amorphous silicon), cadmium-telluride, copper-indium-gallium-selenide, copper-indium-gallium-sulfide, Perovskite, dye sensitized, and organic are reviewed and characterized.
The Performance of first generation solar cells (c-Si based) photovoltaic (PV) technology conversion efficiency lies in the range of 17 to 25% and predicts that the efficiency will reach a maximum of ~ 26.95 % by the year 2024. Multicrystalline silicon solar cell predicted to reach efficiency of 25%. price has been reduced by a factor of 250 over last twenty years (from ~ 76USD to ~ 0.3 USD); its market growth is expected to reach 100 GWP by 2020. In September 2017, the U.S. Department of Energy announced that the U.S. solar industry had achieved the 2020 utility-scale solar cost target of US $0.06/kWh.
Thin film technology (second generation) has the cheaper cost, and can be considered as one of the promising technology for its attractive cost of energy. There are several semiconductor materials that are potential candidates for thin-film solar cells, namely: First: Hydrogenated amorphous silicon (a-Si:H) with best efficiency recorded was around 11%. Second: Cadmium telluride (CdTe), with the best efficiency of single cell recorded was 21% while CdTe based modules has been made the highest efficiency of 16.5%. Third: Copper indium gallium diselenide (CuInGaSe2=CIGS) paves the way for progress at the cell level (~ 25% efficiency), mini module (~ 21%) towards total area module efficiencies of 18%.
There are several third generation concepts: Multi-junction solar cells, Concentrator photovoltaics, Spectral up and down conversion, Multi-exciton generation, Intermediate band-gap solar cells and Hot carrier solar cells. A maximum 38.8% efficiency is recorded for five junctions single cell, 11.2% for organic cell and around 10% for organic module.
Over the last two decades, grid-connected solar photovoltaic (PV) systems have increased to one of the leading power generation capacity additions annually. In 2018, over 100 GW of new PV power capacity was added. Total installed PV power capacity was in excess of 500 GW at the end of 2018

Keywords - Efficiency, Photovoltaic, PV systems, Solar cell.

I. INTRODUCTION

In the late 1900"s as awareness grew in the science community about the effects of global warming and the depletion of fossil fuels, the need for new sources of energy is required. If current trends in using classical energy sources continue, future society will require increased electrical energy. Fortunately, advances in science and technology have provided several alternative means of producing renewable energy on a sustainable level, such as wind, geothermal, biomass, and solar [1]. Solar energy is cleaner, safer investment and potentially important technology and are the future of renewable energy for the human civilization. The direct conversion of solar radiation into electricity is often described as a photovoltaic (PV) energy conversion, because it is based on the photovoltaic effect. In general, the photovoltaic effect means the generation of a potential difference at the junction of two different materials in response to visible or other radiation. The whole field of solar energy conversion into electricity is therefore denoted as the " photovoltaics", which literally means "light-electricity"[2]. Ever since the Becquerel discovered the first photovoltaic effect in 1839, using solar energy has been a goal in the scientific world. Every hour the energy absorbed by Earth's atmosphere from the sun is more than enough to satisfy global energy needs for an entire year. For this reason, research in the last few decades has exploded to find the most efficient and cost effective solar cells so the world does not remain fossil fuels dependent. PV technology offers a number of significant benefits. Solar power is a renewable resource that is available everywhere in the world. Solar PV technologies are small and highly modular and can be used virtually anywhere, unlike many other electricity generation technologies.
This review describes the latest information achievement in the field of photovoltaic solar cells and systems containing the latest efficiency of different types of solar cells published. The article also contains a detailed, cost-based analysis of advanced solar cell manufacturing technologies aimed at higher efficiency with existing equipment and processes. data related to the worlds' energy and particularly that part which related to the conversion of solar energy into electrical energy.
This study will use and discuss results given in the comprehensive research given in reference 3 and

reviewed in references 4 and 5. These results, which is given in appendix 1, are the highest confirmed "one sun" cell and module results are reported. Table 1 confirmed single-junction terrestrial cell and submodule efficiencies measured under the global AM1.5 spectrum (1000 W/m2) at 25°C (IEC 60904-3: 2008, ASTM G-173-03 global). Table 2 "Notable exceptions" for single-junction cells and submodules: "Top dozen" confirmed results, not class records, measured under the global AM1.5 spectrum (1000 W/m 2) at 25°C (IEC 60904–3: 2008, ASTM G-173-03 global).

Table 3 confirmed multiple-junction terrestrial cell and submodule efficiencies measured under the global AM1.5 spectrum (1000 W/m2)at 25°C (IEC 60904-3: 2008, ASTM G-173-03 global). Table 4 confirmed terrestrial module efficiencies measured under the global AM1.5 spectrum (1000 W/m2) at a cell temperature of 25°C (IEC 60904-3: 2008, ASTM G-173-03 global).

II. SOLAR CELL STRUCTURE AND PARAMETERS

The solar energy conversion into electricity takes place in a semiconductor device that is called a solar cell. A solar cell is an electronic unit (pn junction) fabricated from semiconductor materials that delivers a certain amount of electrical power characterized by an output voltage and current when it is exposed to solar radiation [6, 7, 8]. A simple structure of solar cell is shown fig. 1. Solar cell consists of two different layers of Silicon deliberately doped with small quantities of impurities atoms (n-type and p-type) joined together to form a p-n junction. Top has several metallic contact fingers forming cell's negative terminal. Back has metal contact form the cell's positive terminal. Total thickness is ~ 0.3 mm [9].

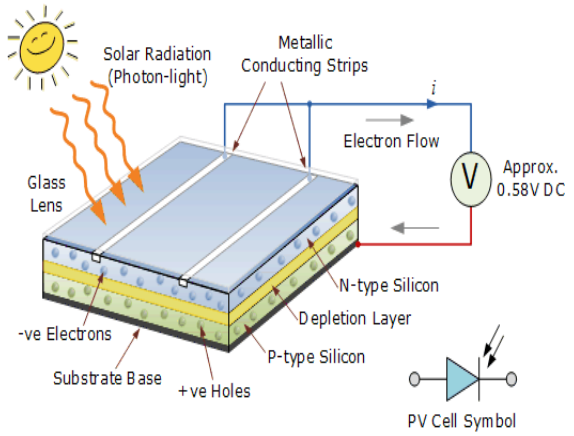

Fig. 1: A simple structure of solar cell.

The behavior of the solar cell can be described by a simple equivalent circuit, illustrated in Fig. 2, in which a diode and a current source are connected in parallel. The diode is formed by a p-n junction.

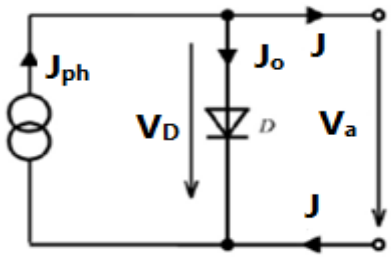

Fig. 2: A simple equivalent circuit of solar Cell.

The main parameters that are used to characterize the performance of solar cells are [10, 11]; the peak power, P_{max}, the short-circuit current density, J_{sc}, the open-circuit voltage, V_{oc}, and the fill factor, FF and the efficiency η. These parameters (P_{max}, J_{sc} and V_{oc}) are determined from the illuminated J-V characteristic as shown in fig. 3. The conversion efficiency, η, and the fill factor FF are determined from these parameters. The short-circuit current, I_{sc}, is the current that flows through the external circuit when the electrodes of the solar cell are short circuited. The J-V characteristic of an illuminated solar cell that behaves as the ideal diode is given by Eq.[12, 13].

$$J(V_a) = J_{rec}(V_a) - J_{gen}(V_a) - J_{ph} = J_0\left[\exp\left(\frac{eV_a}{kT}\right) - 1\right] - J_{ph}.$$

In the ideal case, J_{sc} is equal to the J_{ph} as can be easily derived from:

$$J(V_a) = J_0\left[\exp\left(\frac{qV_a}{kT}\right) - 1\right] - J_{ph}$$

The open-circuit voltage (V_{oc}) is the voltage at which no current flows through the external circuit. It is the maximum voltage that a solar cell can deliver.

$$V_{oc} = \frac{kT}{q}\ln\left(\frac{J_{ph}}{J_0} + 1\right)$$

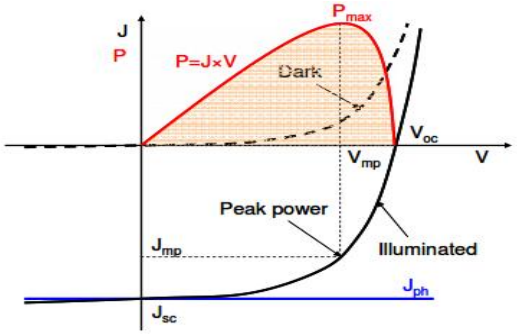

Fig. 3: Dark and Illuminated J-V characteristic of ideal solar cell.

The fill factor is the ratio between the maximum power (Pmax= Jmp * Vmp) generated by a solar cell and the product of V_{oc} and J_{sc}.

$$FF = \frac{J_{mp}V_{mp}}{J_{sc}V_{oc}}$$

The conversion efficiency (η) is calculated as the ratio between the generated maximum power and the

incident power. The irradiance value, Pin, of 1000 W/m^2 of AM1.5 spectrum has become a standard for measuring the conversion efficiency of solar cells.

$$\eta = \frac{P_{max}}{P_{in}} = \frac{J_{mp} V_{mp}}{P_{in}} = \frac{J_{sc} V_{oc} FF}{P_{in}}$$

III. SOLAR CELL TECHNOLOGIES AND PROGRESS

The various types of materials applied for photovoltaic solar cells includes mainly in the form of silicon (single crystal, multi-crystalline, amorphous silicon), cadmium-telluride, copper-indium-gallium-selenide, copper-indium-gallium-sulfide [14, 15, 16, 17, 18], Perovskite, dye sensitized, and organic . On the basis of these materials, the photovoltaic solar cells are categorized into three classes or generations as discussed in the following sections [19, 20, 21, 22, 23].

A. First Generation

The first practical use of solar cells was the generation of electricity on the orbiting satellite Vanguard 1 in 1958. These first solar cells were made from single crystal silicon wafers and had efficiency of 6%. The space application was for some time the only application of solar cells. Crystalline silicon solar cell technology represents today not only single crystal silicon wafer-based solar cells, but also multicrystalline silicon solar cells [24]. Both technologies that deal with " bulk" crystalline silicon are considered the first generation solar cells for terrestrial applications.

The typical external parameters of a crystalline silicon solar cell are; J_{sc} of 35 mA/ cm2, V_{oc} up to 0.65 V and FF in the range 0.75 to 0.80. The conversion efficiency lies in the range of 17 to 22% [10]. Fig. 4 plots historical evolution of crystalline silicon solar cell efficiencies starting from 1954, which predicts that the efficiency will reach a maximum of ~ 26.95 % by the year 2024 [25]. The highest efficiency is achieved by back-contact interdigitated solar cells [26].

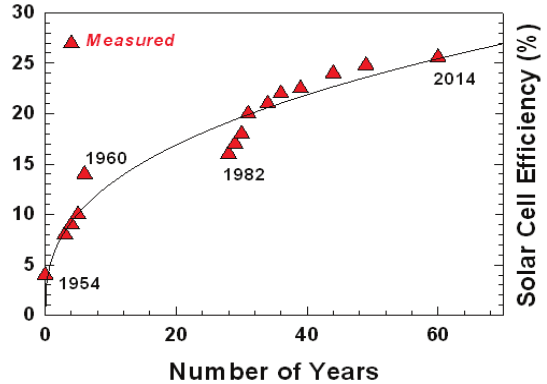

Fig. 4. Plot of measured crystalline Si solar cell efficiency as a function of time from 1954 to 2014, and predicts the efficiency by the year 2024.

The progress of Si-based photovoltaic (PV) technology has grown to 55 GW, it dominates 90 % of the market, and its price reduction record has been enviable (Fig. 5). Its market growth is almost 20-30 % and is estimated to reach 100 GW (W_P) /year by 2020 [27].

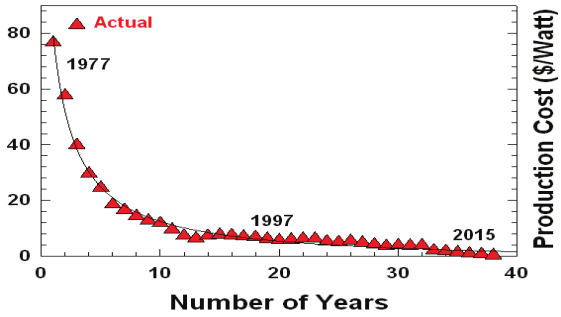

Fig. 5 Historical trend of cost reduction in crystalline Si solar cell production after 40 years.

The driving factor in the industrial development of Si PV has been cost reduction in order to compete with fossil fuels. The cost of manufacturing a solar cell has been reduced from ~ US $ 76/W_P in 1977 to ~ US $ 0.3/W_P in 2015 as shown in Fig. 6. In September 2017, the U.S. Department of Energy announced that the U.S. solar industry had achieved the 2020 utility-scale solar cost target of US $0.06/kWh, three years ahead of schedule and is moving toward the 2030 goal of $0.03/kWh [28].

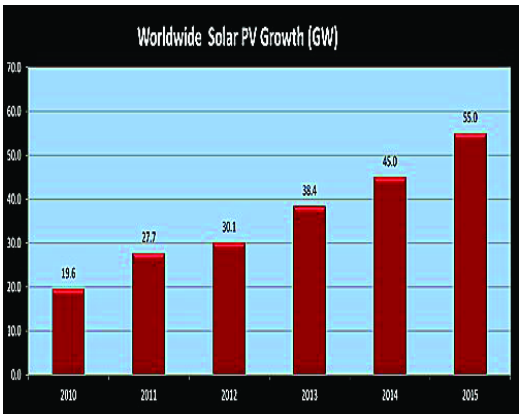

(a)

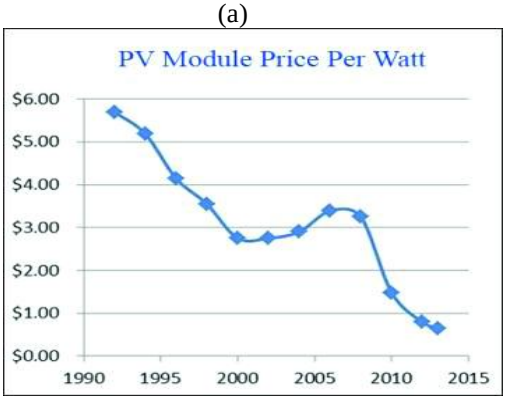

(b)

Fig. 6. PV growth from 2010-2015 (a), and reduction in PV module price (b).

B.Second Generation

low cost thin-film solar cells, which represent a second generation solar cells for terrestrial application. There are several semiconductor materials that are potential candidates for thin-film solar cells, namely: Hydrogenated amorphous silicon (a-Si:H), Cadmium telluride (CdTe), Copper indium gallium diselenide (CuInGaSe2=CIGS).

There are a few fundamental differences between second-generation solar cells and first generation solar cells. The most notable difference is the semiconductor material used in the cell has a direct band gap as opposed to the indirect band gap of silicon, but these cells still rely on a p-n junction design. Thin film cells have a top layer called the winder layer made of a large band gap material that absorbs the higher energy photons and a bottom layer called the absorber layer made of a smaller band gap material that absorbs the lower energy photons, which are not absorbed by the window layer.

Amorphous Si (a-Si) PV modules are the primitive solar cells that are first to be manufactured industrially. Amorphous (a-Si) solar cells can be manufactured at a low processing temperature, thereby permitting the use of various low cost, polymer and other flexible substrates. The best efficiency of amorphous silicon recorded was around 11% [29].

Among thin-film solar cells, cadmium telluride (CdTe) is one of the leading candidate for the development of cheaper, economically viable photovoltaic (PV) devices, and it is also the first PV technology at a low cost [30, 31]. CdTe has a band gap of ~1.5 eV as well as high optical absorption coefficient and chemical stability. The best efficiency of CdTe solar cell recorded was 21% [29]. Cadmium telluride (CdTe) based modules have been successful lately due to their low cost position, significant improvement has been made the highest efficiency of 16.5% has been reported. [32].

CIGS is a quaternary compound semiconductor comprising of the four elements, namely: Copper, Indium, Gallium and Selenium [33]. CIGS are also direct band gap type semiconductors. Compared to the CdTe thin film solar cell, CIGS hold a higher efficiency. Due to their significantly high efficiency and economy, CIGS based solar cell technology forms one of the most likely thin film technologies. Fig. 7 indicates that the recent progress at the cell level paves the way for progress at the cell level (~ 25% efficiency), mini module (~ 21%) towards total area module efficiencies of 18%. Low cost CIGS PV modules can provide electricity below € 0.05 / kWh (LCOE) [34].

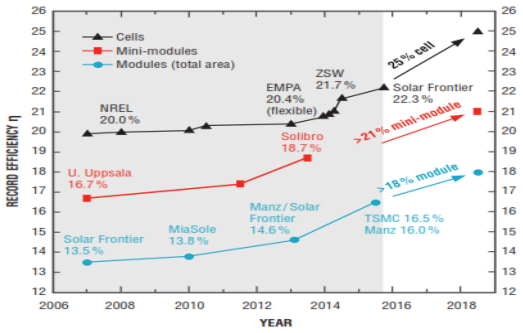

Fig. 7: Evolution of record efficiencies of CIGS highlighting a steeper increase since 2014;

Fig. 8 shows the typical efficiency of PV system and the investment costs over time in the US for thin film PV cells [35]. It is clear that the overall efficiency of PV cells has been improved and still it is subject to further improvement in 2020. Thin film technology has the cheaper cost, and can be considered as one of the promising technology for its attractive cost of energy especially in places that are exposed to a relatively high solar irradiance.

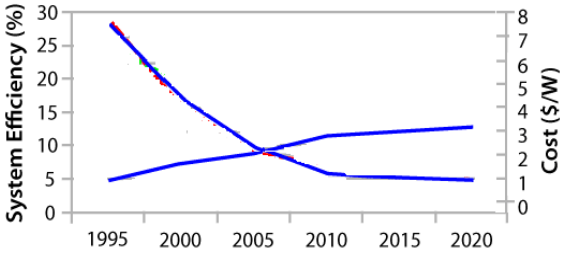

Fig. 8. Thin film PV System capital cost and efficiency up to 2020 [35].

C. Third generation photovoltaic

The third generation photovoltaic refer to all novel approaches that aim to overcome the single bandgap limit, preferably at a low cost. Due to high costs of first generation solar cells and toxicity and limited availability of materials for second-generation solar cells, a new generation of solar cells emerged. Currently there is a lot of solar research going on in what is being referred to in the in the industry as third-generation solar cells. There are several third generation concepts: multi-junction solar cells, concentrator photovoltaics, spectral up and down conversion, multi-exciton generation, intermediate band-gap solar cells and hot carrier solar cells [20]. A maximum 38.8% efficiency is recorded for five junctions solar cell, 11.2% for organic cell and around 10% for organic module.

IV. PHOTOVOLTAIC (PV) SYSTEMS EVOLUTION

In order to use solar electricity for practical devices, which require a particular voltage or current for their operation, a number of solar cells are connected together to form a solar panel, also called a PV

module. For largescale generation of solar electricity the solar panels are connected together into a solar array. Fig. 9(a) shows a crystalline solar cell. A PV module is a larger device in which many solar cells are connected, as illustrated in Fig. 9(b). The names PV module and solar module are often used interchangeably. A solar panel, as illustrated in Fig. 9(c), consists of several PV modules that are electrically connected and mounted on a supporting structure. Finally, a PV array consists of several solar panels.

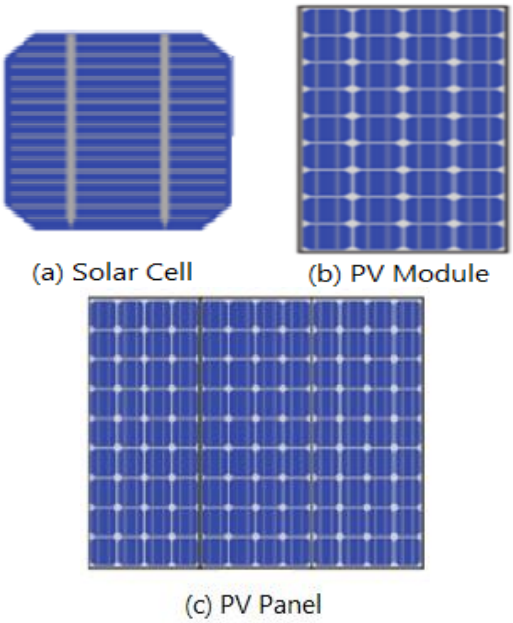

Fig. 9(a) Solar Cell, (b) PV module, (c) PV Panel.

making a solar module out of an ensemble of solar cells, the solar cells can be connected in different ways: first, they can connected in a series connection as shown in Fig. 10(a). In a series connection the voltages add up. For example, if the open circuit voltage of one cell is equal to 0.6 V, a string of three cells will deliver an open circuit voltage of 1.8 V. For series connected cells, the current does not add up but is determined by the photocurrent in each solar cell. Hence, the total current in a string of solar cells is equal to the current generated by one single solar cell. Secondly, solar cells are connected in parallel as illustrated in Fig. 10(b), which shows three solar cells connected in parallel, the current becomes three times as large, while the voltage is the same as for a single cell.

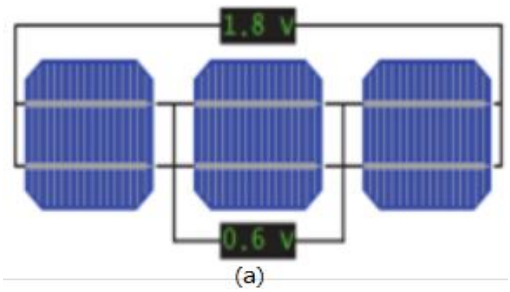

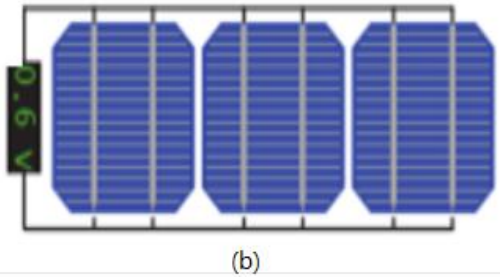

Fig. 10(a) Three solar cells connected in series, (b) Three solar cells connected in parallel.

For solar cells with a classical front metal grid, Fig. 11 shows the I-V curve of solar cells connected in series and parallel. If we connect two solar cells in series, the voltages add up while the current stays the same. If cells are connected in parallel, the voltage is the same over all solar cells, while the currents of the solar cells add up.

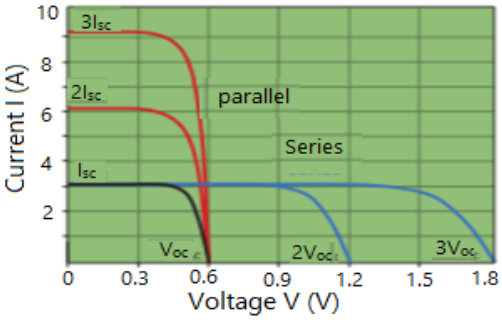

Fig. 11: I-V curve of solar cells connected in series (blue) and parallel (red).

The solar panels are part of a complete PV solar system, which, depending on the application, comprises:

A. Batteries for electricity storage

Energy storage is a vital part of stand-alone systems because it assures that the system can deliver electricity during the night and in periods of bad weather. Usually, batteries are used as energy storage units. DC-DC converters are used to convert the module output, which will have a variable voltage depending on the time of the day and the weather conditions, to a fixed voltage output that can be used to charge a battery or used as input of inverter in a grid-connected system.

B. DC-AC inverters

That connect a PV solar system to the electrical grid to convert the DC electricity originating from the PV modules into AC electricity that can be fed into the electricity grid.

C. Other miscellaneous

Electrical components or mounting elements. Cables are used to connect the different components of the PV system with each other and to the electrical load.

It is important to choose cables of sufficient thickness in order to minimize resistive losses.

Depending on the system configuration, three main types of PV systems can distinguished: stand-alone PV system, grid-connected PV system and hybrid solar system.

D. Stand-alone systems

They are rely on solar PV power only. These systems can consist of the PV modules and a load only or they can include batteries for energy storage. When using batteries charge regulators are included, which switch off the PV modules when batteries are fully charged, and may switch off the load to prevent the batteries from being discharged below a certain limit. Fig. 12 shows schematically examples of large stand-alone PV system with both DC and AC loads.

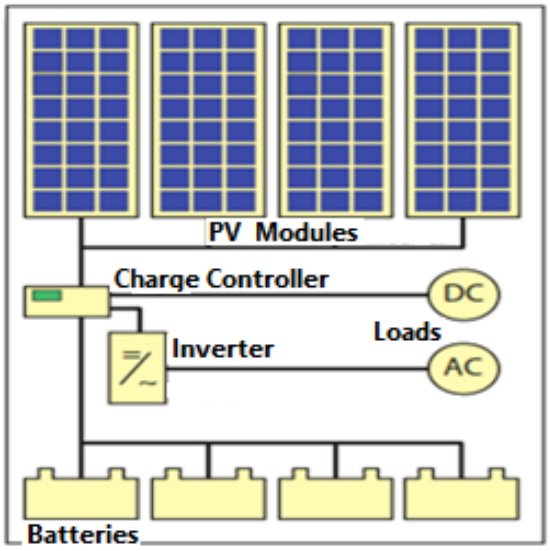

Fig. 12: Schematically example of large stand-alone PV system with both DC and AC loads.

E. Grid-connected PV systems

They have become increasingly popular for building integrated applications. As illustrated in Fig. 13 they are connected to the grid via inverters, which convert the DC power into AC electricity. Large Grid-connected PV fields act as power stations from that all the generated PV electricity is directly transported to the electricity grid. They can reach peak powers of up to several hundreds of MWp. India soon reclaimed the launch of its 1000 MW Kurnool Ultra Mega Solar Park in Andhra Pradesh. Spread over 23 km^2, this solar park was operational by May 2017 and by October, had already generated over 800 million units of energy and saved over 700,000 tons of carbon dioxide. Shakti Sthala, Pavagada, Karnataka, India is the solar project will be largest solar park in the last three years. The enormous 2,000 MW capacity park spans across 52.5 km^2 over five villages. the solar farm will produce electricity to power approximately 700,000 households

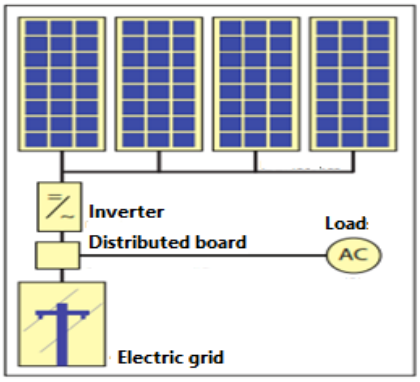

Fig. 13. Schematically example of Grid-connected PV systems.

F. Hybrid solar systems

They consist of combination of PV modules and a complementary method of electricity generation such as a diesel, gas or wind generator. Fig. 14 represents schematic representation of a hybrid PV and wind systems that has a diesel generator as alternative electricity source. Hybrid power plants (wind- or solar-diesel) combine at least two different energy types.

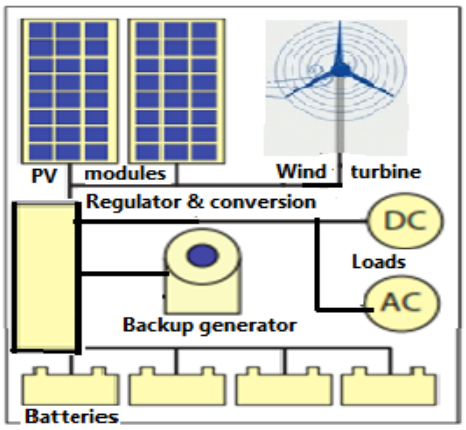

Fig. 14 represents schematic representation of a hybrid PV and wind systems that has a diesel generator backup.

The Caribbean island will soon have a state-of-the-art microgrid that combines 11 MW wind, 6 MW new energy storage, a pre-existing 3 MW battery bank, and a small solar array. The renewable energy and storage assets will be used to limit the use of the 17 MW of diesel generators. The new energy storage solution will provide grid stability and reliability, as well as prevent curtailment of generation from renewable sources. The GEMS software system will manage the island's generation assets as a microgrid. The system is expected to be online in April 2020.

V. GLOBAL PV PRODUCTION AND INSTALLATION

At present, there are four primary market areas for photovoltaic terrestrial applications:

1. Consumer products, such as watches, calculators, and lanterns.

2. Off-grid, also called stand alone, residential power systems, such as solar home systems for individual households.
3. Off-grid industrial power systems for water management, lighting, and telecommunication.
4. Grid connected PV systems that are integrated in roofs and outer walls of buildings or in noise barriers along the motorways.

The commercial production of solar cells is steadily increasing and from 1996, the average increase is around 30%. If the annual growth of PV solar energy production is 40% will lead to power production of 2.4 $\times 10^{10}$ kW_p in 2030. This demonstrates that there must be a steady growth in solar cells production so that PV solar energy becomes a significant energy source after a period of 10 years.

In 2018 the PV market broke several records and continued its global expansion as shown in fig. 16, with reaching almost the 115 GW threshold. The main reason is the contribution of the China whose PV development accounts for almost the 74% of the total installed capacity in 2018 [36]. The IEA's Renewable Energy Market Report 2018 forecasts a new photovoltaic power capacity between 575 and 720 GW that will be installed globally between 2018 and 2023. At present 397 GW represents the minimum installed by end 2017. Remaining installations account for some additional 5.7 GW installed in the rest of world that could bring the overall installed capacity to around 402.5 GW in total as shown in Fig. 15. China alone represented 131 GW, USA second (51 GW), Japan third (49 GW), Germany, ranks fourth (42 GW) [36].

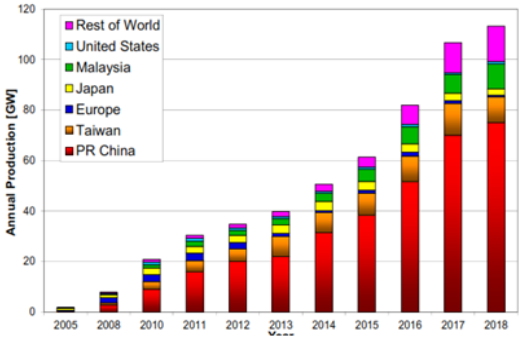

Fig. 15: World photovoltaic (PV) cell/module production from 2005 to 2018 [36].

Solar system hardware prices have declined by over 80% over the last two decades. Over the last 10 years the Levelized Cost of Electricity (LCoE) benchmark has decreased by over 75% to USD 69/MWh. These developments were made possible by the rapid increase of countries embracing solar energy, and the rapid growth of the PV manufacturing industry in China after 2005. Most, but not all, market analysts expect a larger growth rate in 2020 as shown in fig. 16 [36, 37]. New installations are forecasted to be between 107 GW and 140 GW. The IEA's Renewable Energy Market Report 2018 forecasts a new photovoltaic power capacity between 575 and 720 GW that will be installed globally between 2018 and 2023 [38].

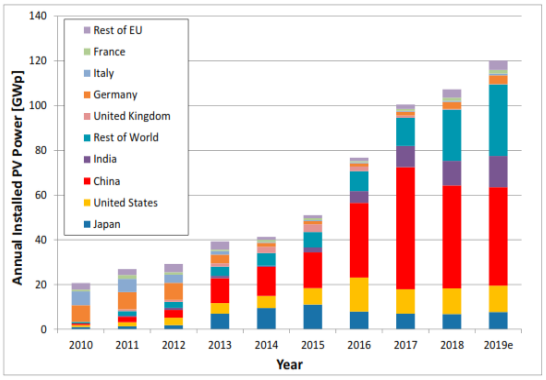

Fig. 16. Annual photovoltaic installations from 2010 to 2019.

VI. CONCLUSION

The progress of Si-based photovoltaic (PV) technology has grown to 55 GW, it dominates 90 % of the market, and its price reduction record has been enviable. Its market growth is almost 20-30 % and is estimated to reach 100 GW (WP) /year by 2020.

From the study, it is concluded that second generation of solar cells (thin film solar cells) have many advantages over traditional silicon solar cells based on energy and cost efficiency. Secondly, low cost and high conversion efficiency of the cell are basis of evaluation of solar cell. Although as compared to thin film based solar cells, traditional silicon solar cells have high efficiencies recorded till now but pure silicon as well as energy requiring process makes it expensive as compared to output power. On the other hand thin film solar cells require less material, energy, time and cost. Due to this second generation thin film solar cells are preferred to be used as the cost is not high as compared to output power.

Due to high costs of first generation solar cells and toxicity and limited availability of materials for second-generation solar cells, a new generation of solar cells emerged. Currently there is a lot of solar research going on in what is being referred to in the in the industry as third-generation solar cells. A maximum (38.8%) efficiency ever is recorded for five junctions third generation solar cell, If the annual growth of PV solar energy production is 40% will lead to power production of 2.4 × 1010 kWp in 2030. This demonstrates that there must be a steady growth in solar cells production so that PV solar energy becomes a significant energy source after a period of 10 years.

REFERENCES

[1] Turner J A. A realizable renewable energy future, Science 1999; 285(5427): 687-689.

[2] "Basic Photovoltaic Principles and Methods" (1982), Published by Technical Information Office, Solar Energy Research Institute 1617 Cole Boulevard, Golden, Colorado 80401.
[3] Green MA, Emery K, Hishikawa Y, et al.(2018) Solar cell efficiency tables (version 52). Progress Photovoltaic Res Appl. 26(7):427-436.
[4] Green MA, Emery K, Hishikawa Y, et al.(2018), Solar cell efficiency tables (version 51). Progress Photovoltaic Res Appl. 26(1):3-12.
[5] Green MA, Emery K, Hishikawa Y, Warta W. Solar cell efficiency tables (version 33). Progress Photovoltaic Res Appl. (2009), 17(1):85-94.
[6] D.M. Chapin, C.S. Fuller, and G.L. Pearson, A New Silicon p-n Junction Photocell for Converting Solar Radiation into Electrical Power, (1954) J. Appl. Phys. 25, 676.
[7] Choubey, P.C., Oudhia, A. and Dewangan, R. (2012) "A Review: Solar Cell Current Scenario and Future Trends" Recent Research in Science and Technology, 4, 99-101.
[8] McEvoy, A., Castaner, L. and Markvart, T. (2012) "Solar Cells: Materials, Manufacture and Operation" 2nd Edition, Elsevier Ltd., Oxford, 3-25.
[9] Tetsuo Soga, Nanostructured Materials for Solar Energy Conversion, Fundamentals of Solar Cell, (December 2006), pp.3-43, DOI: 10.1016/B978-044452844-5/50002-
[10] "Photovoltaic Cell Conversion Efficiency Basics" (2014) U.S. Department of Energy.
[11] Fill factor analysis of solar cells' current–voltage curves' (2010), Progress in Photovoltaics Research and Applications 18(7):511 – 515.
[12] G.Sahin,, G. Kerimli, F. I. Barro, M. Sane and M. H. Alma "Performance of conversion efficiency of a crystalline silicon solar cell with base doping density" (2017) Physics, Volume 7, 2017, Pages 4264-4268.
[13] P.S.R. Murty, in Power Systems Analysis (Second Edition), 2017.
[14] McEvoy, A., Castaner, L. and Markvart, T. (2012) Solar Cells: Materials, Manufacture and Operation. 2nd Edition, Elsevier Ltd., Oxford, 3-25.
[15] Energy from the Sun, Student Guide (2015-2016). National Energy Education Development Project (NEED).
[16] Grisham, L.R. (2008) Nuclear Fusion in: Future Energy, Improved, Sustainable and Clean Options for our Planet, Edited by Trevor M. Letcher, 2nd Edition, Elsevier Ltd., Amsterdam, 291-301.
[17] Bertolli, M. (2008) Solar Cell Materials. Course: Solid State II. Department of Physics, University of Tennessee, Knoxville.
[18] Bagher, A.M., Vahid, M.M.A. and Mohsen, M. (2015) Types of Solar Cells and Application. American Journal of Optics and Photonics, 3, 94-113.
[19] Srinivas, B., Balaji, S., Nagendra Babu, M. and Reddy, Y.S. (2015) Review on Present and Advance Materials for Solar Cells. International Journal of Engineering Research-Online, 3, 178-182.
[20] Choubey, P.C., Oudhia, A. and Dewangan, R. (2012) A Review: Solar Cell Current Scenario and Future Trends. Recent Research in Science and Technology, 4, 99-101.
[21] McEvoy, A., Castaner, L. and Markvart, T. (2012) Solar Cells: Materials, Manufacture and Operation. 2nd Edition, Elsevier Ltd., Oxford, 3-25.
[22] Bagher, A.M., Vahid, M.M.A. and Mohsen, M. (2015) Types of Solar Cells and Application. American Journal of Optics and Photonics, 3, 94-113.
[23] Junfeng Yan and Brian R. Saunders" Third-generation solar cells: a review and comparison of polymer: fullerene, hybrid polymer and perovskite solar cells, RSC Adv.,2014,4,43286.
[24] R. W. Miles, K. M. Hynes and I. Forbes, " Photovoltaic Solar Cells: An overview of State-of-the art cell development and environmental issues, "Progress in Crystal Growth and Characterization of Materials 51,1-42, Elsevier Ltd., 2005.
[25] K. Sopian, S. L. Cheow, and S. H. Zaidi" An overview of crystalline silicon solar cell technology: Past, present, and future" AIP Conference Proceedings 1877, 020004 (2017); https://doi.org/10.1063/1.4999854.
[26] Yoshikawa K, Kawasaki H, Yoshida W, et al. Silicon heterojunction solar cell with interdigitated back contacts for a photoconversion efficiency over 26%. (2017), Nature Energy. 2(5):17032..
[27] Renewables 2019, Global Status Report, REN 21, http://www.ren21.net/GSR2019-Renewables-2019-Global-Status-Report-Key- Findings-EN
[28] Global Market Outlook For Solar Power / 2018 - 2022 , http://www.solarpowereurope.org/wp-content/uploads/2018/09/Global-Market-Outlook-2018-2022.pdf.
[29] Yogi Goswami, D. and Kreith, F. (2007) Handbook of Energy Efficiency and Renewable Energy. CRC Press, Boca Raton.
[30] Luque, A. and Hegedus, S. (2003) Handbook of Photovoltaic Science and ngineering. 2nd Edition, John Wiley & Sons, Ltd., Hoboken. http://dx.doi.org/10.1002/0470014008.
[31] M. Alsumiri and H.El Khashab 'Solar Energy Technology Choice Development" (2018), ICPRE 64, https://doi.org/10.1051/e3sconf/2018 0.
[32] V. Baharwani, N. Meena, A. Sharma, R. Stephen, P. Mohanty "Comparative Performance Assessment of different Solar PV Module Technologies" (2015) IJHET, Vol.5, issue 1, p. 230.
[33] Andorka, F. (2014) CIGS Solar Cells Simplified. Solar Power World.http://www.solarpowerworldonline.com/2014/01/cigs-solar-cells-simplified/.
[34] White paper for CIGS thin film solar cell technology [Internet], Zentrum für Sonnenenergie- and Wasserstoff-Forschung Baden-Württemberg, Stuttgart (2017) http://cigs-pv.net/wortpresse/wp-content/uploads/2015/12/CIGS-WhitePaper.
[35] 0.Srinivas, B., Balaji, S., Nagendra Babu, M. and Reddy, Y.S. (2015) Review on Present and Advance Materials for Solar Cells. International Journal of Engineering.
[36] Arnulf Jäger-Waldau, Snapshot of Photovoltaics, (February 2019), Energies, 12, 769; doi:10.3390/en12050769
[37] Solar Power Europe, 2018, Global Market Outlook for Solar Power 2018–2022; Solar Power Europe: Brussels, Belgium.
[38] International Energy Agency. Renewable Energy Market Report 2018—Market Trends and Projections to 2023; Paris, France, 2018; 210p., ISBN 978-92-64-30684-4.

Appendix

TABLE 1 Confirmed single-junction terrestrial cell and submodule efficiencies measured under the global AM1.5 spectrum (1000 W/m^2) at 25°C (IEC 60904-3: 2008, ASTM G-173-03 global)

Classification	Efficiency, %	Area, cm^2	V_{oc}, V	J_{sc}, mA/cm^2	Fill Factor, %	Test Centre (date)	Description
Silicon							
Si (crystalline cell)	26.7 ± 0.5	79.0 (da)	0.738	42.65[a]	84.9	AIST (3/17)	Kaneka, n-type rear IBC[4]
Si (multicrystalline cell)	22.3 ± 0.4[b]	3.923 (ap)	0.6742	41.08[c]	80.5	FhG-ISE (8/17)	FhG-ISE, n-type[5]
Si (thin transfer submodule)	21.2 ± 0.4	239.7 (ap)	0.687[d]	38.50[d,e]	80.3	NREL (4/14)	Solexel (35 μm thick)[6]
Si (thin film minimodule)	10.5 ± 0.3	94.0 (ap)	0.492[d]	29.7[d,f]	72.1	FhG-ISE (8/07)	CSG Solar (<2 μm on glass)[7]

III-V cells							
GaAs (thin film cell)	**29.1 ± 0.6**	**0.998 (ap)**	**1.1272**	**29.78[g]**	**86.7**	**FhG-ISE (10/18)**	**Alta Devices[8]**
GaAs (multicrystalline)	18.4 ± 0.5	4.011 (t)	0.994	23.2	79.7	NREL (11/95)	RTI, Ge substrate[9]
InP (crystalline cell)	24.2 ± 0.5[b]	1.008 (ap)	0.939	31.15[a]	82.6	NREL (3/13)	NREL[10]
Thin film chalcogenide							
CIGS (cell)	22.9 ± 0.5	1.041 (da)	0.744	38.77[h]	79.5	AIST (11/17)	Solar Frontier[11,12]
CdTe (cell)	21.0 ± 0.4	1.0623 (ap)	0.8759	30.25[e]	79.4	Newport (8/14)	First Solar, on glass[13]
CZTSSe (cell)	**11.3 ± 0.3**	**1.1761 (da)**	**0.5333**	**33.57[g]**	**63.0**	**Newport (10/18)**	**DGIST, Korea[14]**
CZTS (cell)	10.0 ± 0.2	1.113 (da)	0.7083	21.77[a]	65.1	NREL (3/17)	UNSW[15]
Amorphous/microcrystalline							
Si (amorphous cell)	10.2 ± 0.3[i,b]	1.001 (da)	0.896	16.36[e]	69.8	AIST (7/14)	AIST[16]
Si (microcrystalline cell)	11.9 ± 0.3[b]	1.044 (da)	0.550	29.72[a]	75.0	AIST (2/17)	AIST[16]
Perovskite							
Perovskite (cell)	20.9 ± 0.7[i,j]	0.991 (da)	1.125	24.92[c]	74.5	Newport (7/17)	KRICT[17]
Perovskite (minimodule)	17.25 ± 0.6[j,j]	**17.277 (da)**	1.070[d]	20.66[d,h]	78.1	Newport (5/18)	Microquanta, 7 serial cells[18]
Perovskite (submodule)	11.7 ± 0.4[i]	703 (da)	1.073[d]	14.36[d,h]	75.8	AIST (3/18)	Toshiba, 44 serial cells[19]
Dye sensitised							
Dye (cell)	11.9 ± 0.4[j,k]	1.005 (da)	0.744	22.47[n]	71.2	AIST (9/12)	Sharp[20]
Dye (minimodule)	10.7 ± 0.4[j,j]	26.55 (da)	0.754[d]	20.19[d,o]	69.9	AIST (2/15)	Sharp, 7 serial cells[21]
Dye (submodule)	8.8 ± 0.3[j]	398.8 (da)	0.697[d]	18.42[d,p]	68.7	AIST (9/12)	Sharp, 26 serial cells[22]
Organic							
Organic (cell)	11.2 ± 0.3[q]	0.992 (da)	0.780	19.30[e]	74.2	AIST (10/15)	Toshiba[23]
Organic (minimodule)	9.7 ± 0.3[q]	26.14 (da)	0.806[d]	16.47[d,o]	73.2	AIST (2/15)	Toshiba (8 series cells)[23]

TABLE 2 "Notable exceptions" for single-junction cells and submodules: "Top dozen" confirmed results, not class records, measured under the global AM1.5 spectrum (1000 Wm^{-2}) at 25°C (IEC 60904-3: 2008, ASTM G-173-03 global)

Classification	Efficiency, %	Area, cm^2	V_{oc}, V	J_{sc}, mA/cm^2	Fill Factor, %	Test Centre (Date)	Description
Cells (silicon)							
Si (crystalline)	25.0 ± 0.5	4.00 (da)	0.706	42.7[a]	82.8	Sandia (3/99)[b]	UNSW p-type PERC top/rear contacts[24]
Si (crystalline)	25.8 ± 0.5[c]	4.008 (da)	0.7241	42.87[c]	83.1	FhG-ISE (7/17)	FhG-ISE, n-type top/rear contacts[25]
Si (crystalline)	26.1 ± 0.3[c]	3.9857 (da)	0.7266	42.62[e]	84.3	ISFH (2/18)	ISFH, p-type rear IBC[26]
Si (large)	26.6 ± 0.5	179.74 (da)	0.7403	42.5[f]	84.7	FhG-ISE (11/16)	Kaneka, n-type rear IBC[4]
Si (multicrystalline)	22.0 ± 0.4	245.83 (t)	0.6717	40.55[e]	80.9	FhG-ISE (9/17)	Jinko solar, large p-type[27]
Cells (III-V)							
GaInP	21.4 ± 0.3	0.2504 (ap)	1.4932	16.31[g]	87.7	NREL (9/16)	LG electronics, high bandgap[28]
GaInAsP/GaInAs	32.6 ± 1.4[c]	0.248 (ap)	2.024	19.51[d]	82.5	NREL (10/17)	NREL, monolithic tandem[29]
Cells (chalcogenide)							
CdTe (thin-film)	22.1 ± 0.5	0.4798 (da)	0.8872	31.69[h]	78.5	Newport (11/15)	First solar on glass[30]
CZTSSe (thin-film)	12.6 ± 0.3	0.4209 (ap)	0.5134	35.21[i]	69.8	Newport (7/13)	IBM solution grown[31]
CZTSSe (thin-film)	**12.6 ± 0.3**	**0.4804 (da)**	**0.5411**	**35.39**	**65.9**	**Newport (10/18)**	**DGIST, Korea[14]**
CZTS (thin-film)	11.0 ± 0.2	0.2339(da)	0.7306	21.74[f]	69.3	NREL (3/17)	UNSW on glass[32]
Cells (other)							
Perovskite (thin-film)	**23.7 ± 0.8[j,k]**	**0.0739 (ap)**	**1.1697**	**25.40[f]**	**79.8**	**Newport (9/18)**	**ISCAS, Beijing[33]**
Organic (thin-film)	**15.6 ± 0.2[m]**	**0.4113 (da)**	**0.8381**	**25.03[f]**	**74.5**	**NREL (11/18)**	**Sth China U. - Central Sth U.[34]**

TABLE 3 Confirmed multiple-junction terrestrial cell and submodule efficiencies measured under the global AM1.5 spectrum (1000 W/m^2) at 25°C (IEC 60904-3: 2008, ASTM G-173-03 global)

Classification	Efficiency, %	Area, cm^2	Voc, V	Jsc, mA/cm^2	Fill Factor, %	Test Centre (Date)	Description
III-V multijunctions							
5 junction cell (bonded)	38.8 ± 1.2	1.021 (ap)	4.767	9.564	85.2	NREL (7/13)	Spectrolab, 2-terminal[35]
(2.17/1.68/1.40/1.06/0.73 eV)							
InGaP/GaAs/InGaAs	37.9 ± 1.2	1.047 (ap)	3.065	14.27[a]	86.7	AIST (2/13)	Sharp, 2 term.[36]
GaInP/GaAs (monolithic)	32.8 ± 1.4	1.000 (ap)	2.568	14.56[b]	87.7	NREL (9/17)	LG electronics, 2 term.
Multijunctions with c-Si							
GaInP/GaAs/Si (mech. stack)	35.9 ± 0.5[c]	1.002 (da)	2.52/0.681	13.6/11.0	87.5/78.5	NREL (2/17)	NREL/CSEM/EPFL, 4-term.[37]
GaInP/GaAs/Si (wafer bonded)	33.3 ± 1.2[c]	3.984 (ap)	3.127[b]	12.7[b]	83.5	FhG-ISE (8/17)	Fraunhofer ISE, 2-term.[38]
GaInP/GaAs/Si (monolithic)	**22.3 ± 0.8[c]**	**0.994 (ap)**	**2.619**	**10.0[d]**	**85.0**	**FhG-ISE** (10/18)	**Fraunhofer ISE, 2-term.**[39]
GaAsP/Si (monolithic)	20.1 ± 1.3	3.940 (ap)	1.673	14.94[e]	80.3	NREL (5/18)	OSU/SolAero/UNSW, 2-term.
GaAs/Si (mech. Stack)	32.8 ± 0.5[c]	1.003 (da)	1.09/0.683	28.9/11.1[e]	85.0/79.2	NREL (12/16)	NREL/CSEM/EPFL, 4-term.[37]
Perovskite/Si (monolithic)	**27.3 ± 0.8[f]**	**1.090 (da)**	**1.813**	**19.99[d]**	**75.4**	**FhG-ISE (6/18)**	**Oxford PV**[40]
GaInP/GaInAs/Ge, Si (spectral split minimodule)	34.5 ± 2.0	27.83 (ap)	2.66/0.65	13.1/9.3	85.6/79.0	NREL (4/16)	UNSW/Azur/Trina, 4-term.[41]
a-Si/nc-Si multijunctions							
a-Si/nc-Si/nc-Si (thin-film)	14.0 ± 0.4[g,c]	1.045 (da)	1.922	9.94[h]	73.4	AIST (5/16)	AIST, 2-term.[42]
a-Si/nc-Si (thin-film cell)	12.7 ± 0.4[g,c]	1.000(da)	1.342	13.45[i]	70.2	AIST (10/14)	AIST, 2-term.[16]
Notable exception							
Perovskite/CIGS[j]	22.4 ± 1.9[f]	0.042 (da)	1.774	17.3[g]	73.1	NREL (11/17)	UCLA, 2-term.[43]
GaInP/GaAs/GaInAs	**37.8 ± 1.4**	**0.998 (ap)**	**3.013**	**14.60[d]**	**85.8**	**NREL (1/18)**	**Microlink (ELO)**[44]

TABLE 4 Confirmed terrestrial module efficiencies measured under the global AM1.5 spectrum (1000 W/m^2) at a cell temperature of 25°C (IEC 60904-3: 2008, ASTM G-173-03 global)

Classification	Effic., %	Area, cm^2	V_{oc}, V	I_{sc}, A	FF, %	Test Centre (Date)	Description
Si (crystalline)	24.4 ± 0.5	13177 (da)	79.5	5.04[a]	80.1	AIST (9/16)	Kaneka (108 cells)[4]
Si (multicrystalline)	19.9 ± 0.4	15143 (ap)	78.87	4.795[a]	79.5	FhG-ISE (10/16)	Trina solar (120 cells)[45]
GaAs (thin film)	25.1 ± 0.8	866.45 (ap)	11.08	2.303[b]	85.3	NREL (11/17)	Alta devices[46]
CIGS (Cd free)	19.2 ± 0.5	841 (ap)	48.0	0.456[b]	73.7	AIST (1/17)	Solar frontier (70 cells)[47]
CdTe (thin-film)	18.6 ± 0.5	7038.8 (da)	110.6	1.533[d]	74.2	NREL (4/15)	First solar, monolithic[48]
a-Si/nc-Si (tandem)	12.3 ± 0.3[f]	14322 (t)	280.1	0.902[f]	69.9	ESTI (9/14)	TEL solar, Trubbach labs[49]
Perovskite	11.6 ± 0.4[g]	802 (da)	23.79	0.577[h]	68.0	AIST (4/18)	Toshiba (22 cells)[19]
Organic	8.7 ± 0.3[g]	802 (da)	17.47	0.569[d]	70.4	AIST (5/14)	Toshiba[23]
Multijunction							
InGaP/GaAs/InGaAs	31.2 ± 1.2	968 (da)	23.95	1.506	83.6	AIST (2/16)	Sharp (32 cells)[50]
Notable exception							
CIGS (large)	15.7 ± 0.5	9703 (ap)	28.24	7.254[i]	72.5	NREL (11/10)	Miasole[51]

★★★