A CROWNED HELICAL GEAR WITH TWIST-FREE TOOTH FLANKS GENERATED BY A CNC HONING MACHINE

[1]VAN-THE TRAN, [2]RUEI-HUNG HSU, [3]CHUNG-BIAU TSAY

[1]Graduate Student-Ph.D. Program of Mechanical and Aeronautical Engineering,
[2]Assistant Professor-Bachelor's Program in Precision System Design,
[3]Chair Professor-Department of Mechanical and Computer-Aided Engineering, Feng Chia University, 100 Wenhwa Rd., Seatwen, Taichung 40724, Taiwan
E-mail: vanct4.hut@gmail.com, rhhsu@fcuoa.fcu.edu.tw, cbtsay@mail.nctu.edu.tw

Abstract- Conventionally, a method for longitudinal tooth flank crowning of the honed work gear surfaces is performed by setting a crossed angle between the honing cutter and work gear axes as a linear function of work gear's displacement in the gear honing process. However, which produces twisted tooth flanks on the honed work gear. Therefore, this paper proposes a method for honing twist-free tooth flanks of the honed work gear by adding a twist-free function into the work gear rotation that given by the product of the rotational angle of the honing cutter and displacement of the work gear. Two numeral examples are presented to validate the proposed method to the honing of helical gear with twist-free tooth flanks. The twist of the honed helical gear tooth flank is reduced significantly by applying the proposed twist-free function.

Keywords-Gear Honing, Longitudinal Crowning, Twist-Free Tooth Flank, Twist-Free Function.

I. INTRODUCTION

Gear honing processes is usually applied to eliminate the tooth surface errors of a hard-finishing helical gear after heat treatment. It can modify and compensate for the distortions of gear tooth surfaces that occur during the heat treatment process. This process uses geometrically undefined cutting edges of a honing cutter for gear surface hard-finishing, and the honing cutter axis forms an intersected angle with the work gear axis. Most published researches on the technology of gear honing focus on the principle of generated gear surface. Recently, for longitudinal tooth flank crowning of work gear surfaces, a methodology has proposed by setting a crossed angle between the honing cutter and work gear axes as a linear function of work gear's displacement in the gear honing process. However, which produces twisted tooth flanks on the honed work gear. Therefore, this paper proposed a method for honing a work gear with twist free tooth flanks by adding a twist-free function into the work gear rotation that given the product of the rotational angle of the honing cutter and displacement of the work gear.

The basic meshing conditions of a crossed helical gear pair have been derived in some textbooks, and some qualitative discussions on the gear honing process, honing machine and tool of the rotary gear honing are available in the researches of Dugas. A gear honing method comprising an additional force variably in accordance with variations in the center distance between the honing cutter and work gear was patented by Davis. Wright and Schriefer introduced some basic and advance information of CNC (Computer Numerical Control) gear honing machines such as applications, axes motions and kinematics. Afterward, Amini et al. investigated the effect of power gear honing on gear surface topography by experimental work that can improve noise qualities of the gear box. Yu et al. proposed a new method for improving the precision of the honed gear surface by using the diamond dressing gear with an external honing ring. Subsequently, Santosa et al. developed a finishing process analysis for the errors of involute gear teeth used in a hydraulic steering system. Mehta and Rathi showed a deeper understanding of internal gear honing process that can produce a work gear with excellent surface-finishing, and compared with other gear finishing processes. Seol and Litvin proposed a shaving method to modify geometry of the spur and helical gears that can be localized and stabilized the bearing contact and reduces noise and vibration. Hung et al. and Chang et al. developed a mathematical model of the shaved gear with an auxiliary crowning, and investigated tooth contact analysis of the shaved gear. However, the work gear and shaving cutter is meshed at the operating pitch cylinder. Therefore, Hsu and Fong and Tran et al. proposed a mathematical model for the tooth profile of work gear at the operating pitch cylinder by the parallel shaving process with the auxiliary crowning mechanism. Hsu proposed a novel hob cutter with the variable tooth thickness in its longitudinal direction and a method of gear hobbing with a diagonal feed that helps reducing the twist on tooth flanks of the generated work gear. Recently, Tran et al. proposed a novel hobbing method to generate anti-twist tooth flanks of the involute helical gear in longitudinal tooth crowning by supplementing an additional rotation angle of work gear during its hobbing process. And Tran et al. proposed a novel honing method for longitudinal

tooth flank crowning of work gear surfaces by setting a crossed angle between the honing cutter and work gear axes as a linear function of work gear's traverse feed in the honing process.

This study proposes a methodology for obtaining a completely longitudinal crowned helical gear with a twist-free tooth flank by adding a twist-free function into the work gear rotation that given by the product of the rotational angle of the honing cutter and displacement of the work gear.

A mathematical model for the tooth profile of work gears honed by applying the twist-free function is also established without modifying the honing cutter's tooth profile.

Two numeral examples are presented to illustrate and verify the merits of the proposed gear honing method in longitudinal tooth crowning of helical gears with the twist-free gear tooth flank.

II. MATHEMATICAL MODEL OF THE STANDARD HONING CUTTER

The theoretical tooth profile of a standard honing cutter is the same as that of an involute helical gear, as shown in Fig. 1. Accordingly, the position vector of the right-hand side profile of the standard honing cutter can be expressed in coordinate system $S_h(x_h, y_h, z_h)$ as follows:

$$\mathbf{r}_h = [x_h(u_1, v_1), y_h(u_1, v_1), z_h(u_1, v_1), 1]^T, \quad (1)$$

Where

$$x_h = r_{bh}\cos(v_1 + \mu_h) + u_1 \cos\lambda_{bh}\sin(v_1 + \mu_h), \quad (2)$$

$$y_h = r_{bh}\sin(v_1 + \mu_h) - u_1 \cos\lambda_{bh}\cos(v_1 + \mu_h), \quad (3)$$

$$z_h = -u_1 \sin\lambda_{bh} + r_{bh}\tan\lambda_{bh} v_1, \quad (4)$$

where

$$\mu_h = \frac{2\pi}{N_h} - \frac{s_{pth}}{2r_{ph}} - inv\alpha_{pth}. \quad (5)$$

where u_1 and v_1 are the surface parameters, r_{bh} is the radius of the base cylinder, λ_{bh} represents the helix lead angle, s_{pth} indicates the cross section space width on the pitch cylinder, α_{pth} is the profile angle in transverse section, and N_h is the number of teeth of the honing cutter, as shown in Fig. 1.

According to differential geometry, the unit normal vector of the right-hand side profile of the standard honing cutter can be determined as:

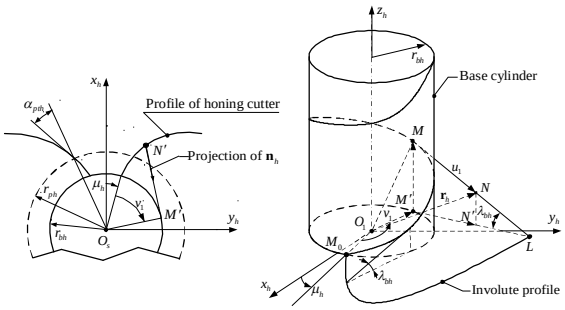

Fig. 1 Surface parameters of the standard honing cutter

$$\mathbf{n}_h(u_1, v_1) = \frac{\frac{\partial \mathbf{r}_h(u_1, v_1)}{\partial u_1} \times \frac{\partial \mathbf{r}_h(u_1, v_1)}{\partial v_1}}{\left| \frac{\partial \mathbf{r}_h(u_1, v_1)}{\partial u_1} \times \frac{\partial \mathbf{r}_h(u_1, v_1)}{\partial v_1} \right|}. \quad (6)$$

III. MATHEMATICAL MODEL FOR THE WORK GEAR GENERATED BY THE PROPOSED HONING METHOD WITH A TWIST- FREE FUNCTION

The 3-D model of the CNC gear honing machine is shown in Fig. 2. Herein, three movements, A_1, X_1 and Y_1, are applied to the setting of honing cutter and work gear, and other three movements, C_1, C_2 and Z_2, are applied to the generation the tooth flanks of work gear surface. The coordinate systems for the honing of helical gears with longitudinal crowning teeth are shown in Fig. 3, where coordinate systems $S_h(x_h, y_h, z_h)$, $S_g(x_g, y_g, z_g)$ and $S_d(x_d, y_d, z_d)$ are rigidly connected to the honing cutter, work gear and frame of honing machine, respectively, while coordinates systems $S_a(x_a, y_a, z_a)$, $S_b(x_b, y_b, z_b)$, $S_c(x_c, y_c, z_c)$ and $S_e(x_e, y_e, z_e)$ are auxiliary coordinate systems for simplicity of coordinate transformation. Although the material and cutting speed of the honing cutter are similar to the grinding process, the honing process can be considered as the meshing process of a gear pair. The operating center distance E_o between the honing cutter and work gear can be expressed as follows:

$$E_o = r_{oh} + r_{og}. \quad (7)$$

The honing cutter and helical gear are meshed with crossed axes.

The crossed angle γ_o of the honing cutter and work gear axes is usually a machine-tool setting (rotational axis A_1), and it can be expressed as follows:

$$\gamma_o = \beta_{oh} \pm \beta_{og}, \quad (8)$$

where the "±" sign indicates the same and opposite direction, respectively, of helices between the honing cutter and work gear. The crossed angle of the honing cutter and work gear is usually fixed during the gear's honing process. However, in order to obtain the work gear with longitudinal tooth flank crowing, the crossed angle (designated as γ_h) is modified as a linear function of work gear's traverse feed in the gear honing process. The relationship between the crossed angle γ_h and work gear's traverse feed l is proposed as follows:

$$\gamma_h = \gamma_o + c_\gamma l, \tag{9}$$

where c_γ is coefficient of the modified crossed angle between the honing cutter and work gear axes.

By applying the homogeneous coordinate transformation matrix equation, transforming from coordinate system S_h of the honing cutter to coordinate system S_g of the work gear, the locus and unit normal vector of the honing cutter, represented in coordinate system S_h that shown as in (1) and (6), can be represented in coordinate system S_g as follows:

$$\mathbf{r}_g(u_1, v_1, \phi_h, l) = \mathbf{M}_{gh}(\phi_h, l) \cdot \mathbf{r}_h(u_1, v_1), \tag{10}$$

And $$\mathbf{n}_g(u_1, v_1, \phi_h, l) = \mathbf{L}_{gh}(\phi_h, l) \cdot \mathbf{n}_h(u_1, v_1), \tag{11}$$

where

$$\mathbf{M}_{gh}(\phi_h, l) = \mathbf{M}_{gc}(l) \cdot \mathbf{M}_{ch}(\phi_h), \tag{12}$$

$$\mathbf{M}_{gc}(l) = \begin{bmatrix} \cos\phi_g & \sin\phi_g & 0 & E_o\cos\phi_g \\ -\sin\phi_g & \cos\phi_g & 0 & -E_o\sin\phi_g \\ 0 & 0 & 1 & -l \\ 0 & 0 & 0 & 1 \end{bmatrix}, \tag{13}$$

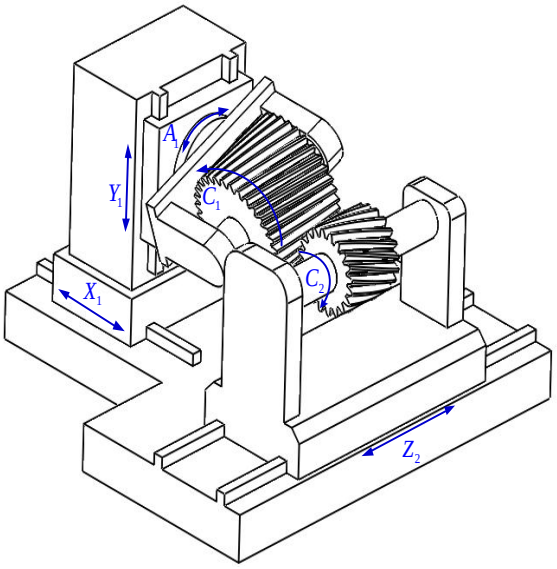

Fig. 2 3-D model of the CNC gear honing machine

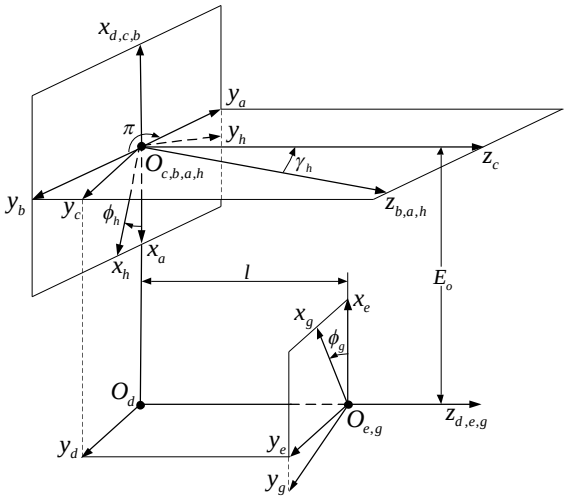

Fig. 3 Coordinate systems for the CNC gear honing machine

$$\mathbf{M}_{ch}(\phi_h) = \begin{bmatrix} -\cos\phi_h & -\sin\phi_h & 0 & 0 \\ \cos\gamma_h\sin\phi_h & -\cos\gamma_h\cos\phi_h & \sin\gamma_h & 0 \\ -\sin\gamma_h\sin\phi_h & \sin\gamma_h\cos\phi_h & \cos\gamma_h & 0 \\ 0 & 0 & 0 & 1 \end{bmatrix}, \tag{14}$$

and the vector transformation matrix $\mathbf{L}_{gh}(\phi_h, l)$ is the sub-matrix of $\mathbf{M}_{gh}(\phi_h, l)$ by deleting it's last column and row.

In the gear honing process, there are two independent kinematic parameters l and ϕ_h that need for longitudinal tooth flank crowning of the work gear. Therefore, there are two equations of meshing between the work gear and the honing cutter as follows:

$$f_{\phi_h}(u_1, v_1, \phi_h, l) = \mathbf{n}_g \cdot \frac{\partial \mathbf{r}_g(u_1, v_1, \phi_h, l)}{\partial \phi_h} = 0, \tag{15}$$

and

$$f_l(u_1, v_1, \phi_h, l) = \mathbf{n}_g \cdot \frac{\partial \mathbf{r}_g(u_1, v_1, \phi_h, l)}{\partial l} = 0. \tag{16}$$

The rotating angle of work gear, $\phi_g(\phi_h, l)$, is set as a function of honing cutter's rotation angle, ϕ_h, and the amount of work gear's traverse feed, l. The rotational relationship between the work gear and honing cutter is defined as

$$\phi_g(\phi_h, l) = \frac{N_h}{N_g}\phi_h + \frac{\tan\beta_{og}}{r_{og}}l, \tag{17}$$

where symbols N_h and N_g indicate the number of teeth of the honing cutter and gear, respectively.

To obtain the twist-free tooth flank of the honed work gear, a twist-free function is added into the work gear rotation that given by the product of the rotational angle of the honing cutter and displacement of the work gear. It can be expressed as follows:

$$f(\phi_h, l) = c_{ft}\phi_h l, \quad (18)$$

where c_{ft} is coefficient of the twist-free function. It depends on amount crowning of work gear surface (depends on crossed angle coefficient c_γ). This coefficient can be determined by an optimization method (e.g. the Golden Section Search in One Dimension). Meanwhile the rotating angle of work gear as in (17) is represented as

$$\phi_g(\phi_h, l) = \frac{N_h}{N_g}\phi_h + \frac{\tan\beta_{og}}{r_{og}} l + c_{ft}\phi_h l. \quad (19)$$

The tooth surface of honed work gear can be defined by solving (9), (13), (14), (15), (16) and (19), simultaneously. The locus of work gear surface depends on motion function of the rotating angle ϕ_h of the honing cutter and the traverse movement l of the work gear. The coefficient c_{ft} as in (18) can be used for generation of the involute helical gear with twist-free tooth flanks in gear honing process.

IV. NUMERAL EXAMPLES

To compare the level of tooth flank twist of the crowned and uncrowned work gears, two indexes are proposed herein: the maximum tooth flank twist (designated M_t) and the crowning evenness ratio (designated R_{ce}) along the longitude of work gears. Wherein, M_t is defined by the largest crowning amount subtract the smallest crowning amount, and R_{ce} is defined by the smallest crowning amount divided by the largest crowning amount, at different positions on each longitude of the work gear surface. Therefore, the tooth flank of work gear surface is a twist-free one if the maximum tooth flank twist approaches zero and the crowning evenness ratio approaches one.

A. Example 1

To validate the proposed longitudinal crowning method, we simulate and compare the topographies of the crowned work gears generated without applying a twist-free function (Case A) and with a twist-free function (Case B), respectively. The basic data for work gear and honing cutter are given in Table 1, and the crossed angle coefficient and twist-free coefficient are given in Table 2. The honing machine setup data are calculated according to the basic meshing conditions as illustrated as in.

Table 1 Basic data of the gear and honing cutter

Work gear data	
Number of teeth (N_g)	35
Normal module (m_{pn})	2.0
Normal circular-tooth thickness (s_{png})	3.14 mm
Normal pressure angle (α_{pn})	20°
Helix angle (β_{pg})	15^oL.H.
Facewidth (F_{wg})	15 mm
Honing cutter data	
Number of teeth (N_h)	150
Helix angle (β_{ph})	10° R.H.
Normal circular-tooth thickness (s_{pnh})	3.14 mm
Honing process data	
Operating center distance (E_o)	188.55 mm
Operating original crossed angle (γ_o)	25°

Table 2 Basic coefficient data

	c_γ	c_{ft}
Case A	2.0×10^{-3}	0
Case B	2.0×10^{-3}	1.7×10^{-3}

The crowning amount and simulated tooth surface topographies of the longitudinal crowned helical gear for Cases A and B are shown in Tables 3 and 4 and Figs. 4 and 5, respectively. Wherein, after applying the twist-free function in gear honing process, the maximum tooth flank twist is reduced from $30.6\mu m$ (Case A) to a negligible amount of $0.3\mu m$ (Case B). Besides, the crowning evenness ratio for the tooth flank surface, as shown in Table 3 and Fig. 4 ($R_{ce} = 0.25$), is much smaller than that of the tooth flank surface generated by applying the twist-free function, as shown in Table 4 and Fig. 5 ($R_{ce} = 0.99$). Thus, it is verified that the twist of the tooth flank is reduced significantly by applying a twist-free function in the proposed gear honing process.

Table 3 Crowning amount of the crowned work gear surface generated by the proposed honing method without applying a twist-free function (Case A)

	Top Land (Unit: μm)								
E	-16.6	-8.2	-2.7	-0.1	-0.6	-4.1	-10.5	-20.0	-32.6
D	-20.1	-10.7	-4.2	-0.7	-0.2	-2.7	-8.2	-16.7	-28.2
C	-24.5	-13.9	-6.3	-1.8	0.0	-1.3	-5.8	-13.2	-23.6

B	-30.7	-18.6	-9.5	-3.5	-0.4	-0.3	-3.3	-9.3	-18.4
A	-43.7	-28.9	-17.2	-8.5	-2.8	-0.2	-0.6	-6.2	-13.1
	1	2	3	4	5	6	7	8	9
Gear Root									
maximum tooth flank twist $M_t = 30.6\mu m$ and longitudinal crowning evenness ratio $R_{ce} = 0.25$									

Table 4 Crowning amount of the crowned work gear surface generated by the proposed honing method with a twist-free function (Case B)

	Top Land (Unit: μm)								
E	-24.5	-13.7	-6.0	-1.4	0.0	-1.4	-6.1	-13.9	-24.8
D	-24.7	-13.9	-6.1	-1.5	0.0	-1.5	-6.2	-14.0	-24.9
C	-24.8	-14.0	-6.2	-1.7	0.0	-1.4	-6.2	-14.0	-24.9
B	-24.7	-13.9	-6.1	-1.4	0.0	-1.4	-6.1	-13.9	-24.9
A	-24.1	-13.2	-5.5	-0.8	0.0	-0.8	-5.5	-13.3	-24.3
	1	2	3	4	5	6	7	8	9
Gear Root									
maximum tooth flank twist $M_t = 0.3\mu m$ and longitudinal crowning evenness ratio $R_{ce} = 0.99$									

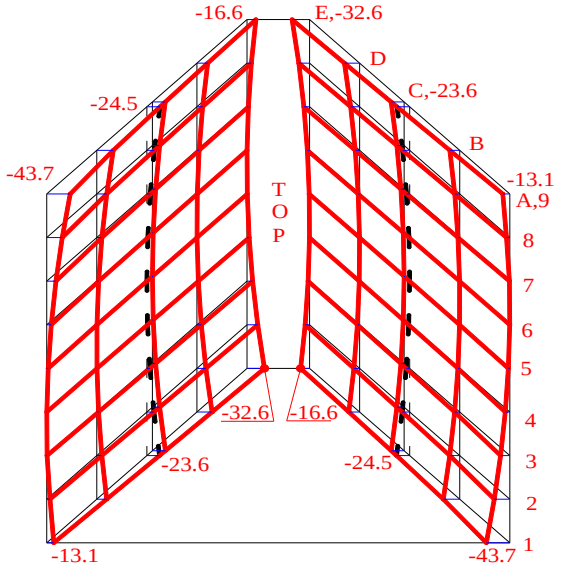

Fig. 4 Simulated topography of the crowned work gear surfaces without applying a twist-free function (Case A)

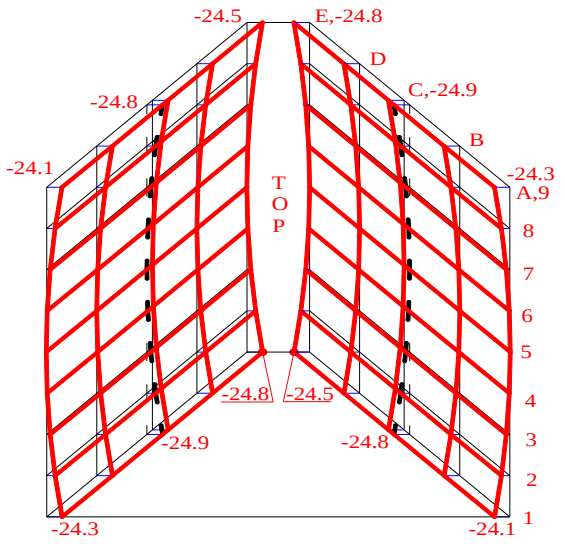

Fig. 5 Simulated topography of the crowned work gear surfaces by applying a twist-free function (Case B)

A. Example 2

In this example, effects of the twist-free coefficient (c_{ft}) on the longitudinal crowning evenness ratio (R_{ce}) are investigated. The basic data for work gear and honing cutter are also chosen the same as those given in Table 1. Three crossed angle coefficient (c_γ) are given $c_{\gamma_1} = 1.5\times10^{-3}$, $c_{\gamma_2} = 2.0\times10^{-3}$ and $c_{\gamma_3} = 2.5\times10^{-3}$. Effects of the twist-free coefficient on the the longitudinal crowning evenness ratio are shown in Fig. 6. It reveals that the evenness ratios are nonlinearly dependent on the twist-free coefficient.

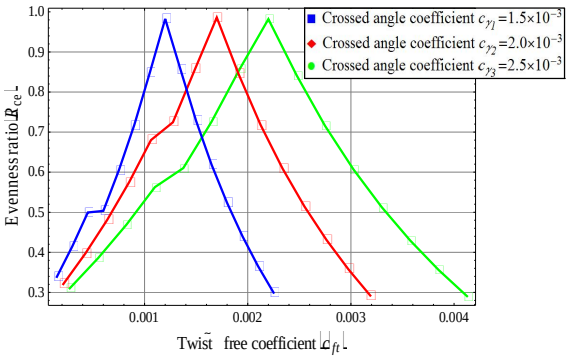

Fig. 6 Relationship between the twist-free coefficient and longitudinal crowning evenness ratio

According to Fig. 6, with the crossed angle coefficients $c_{\gamma_1} = 1.5\times10^{-3}$, $c_{\gamma_2} = 2.0\times10^{-3}$ and $c_{\gamma_3} = 2.5\times10^{-3}$, the maximum longitudinal crowning evenness ratio equals $R_{ce1} = 0.98$, $R_{ce2} = 0.99$ and $R_{ce3} = 0.98$ when the twist-free coefficient equals $c_{ft1} = 1.2\times10^{-3}$, $c_{ft2} = 1.7\times10^{-3}$ and

$c_{ft3} = 2.2\times10^{-3}$, respectively. Therefore, It reveals that the twist-free coefficient are nearly linearly dependent on crossed angle coefficients, as shown in Fig. 7. Therefore, it is easy to choose a suitable twist-free coefficient when the crowning amount of tooth flank on work gear surface is changed (the crossed angle coefficient changed) to get a twist-free tooth flank in the proposed gear honing process.

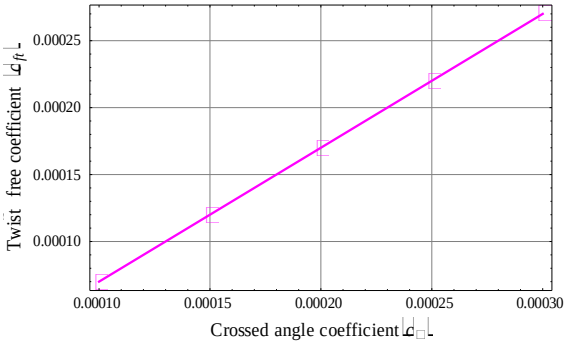

Fig. 7 Relationship between the crossed angle coefficient and twist-free coefficient

CONCLUSIONS

A mathematical model for the tooth flank of a honed work gear surface is established by applying a linear crossed angle function of work gear's traverse feed in gear honing process. To obtain a completely longitudinal crowned helical gear with a twist-free tooth flank, a twist-free function, given by the product of the rotational angle of the honing cutter and displacement of the work gear, is proposed and added into the work gear rotation during the gear tooth honing process. Based on the simulated results of two numeral examples, the following conclusions can be drawn:

- By applying the twist-free function to the proposed gear honing process, tooth flanks of the honed work gear are indeed free of twist.
- The effects of the twist-free coefficient on the longitudinal crowning evenness ratio have also been studied. It is found that the longitudinal crowning evenness ratio is nonlinearly dependent on the twist-free coefficient of the work gear, as shown in Fig. 6.
- The twist-free coefficients are linearly dependent on crossed angle coefficients. Therefore, it is easy to attain twist-free tooth flanks of the work gear when the crossed angle coefficient is changed, as shown in Fig. 7.

NOMENCLATURE

s_{jki}	circular tooth thickness, j = b, o, p; k = t, n; i = h, g
β_{jki}	helix angle, j = b, o, p; k = t, n; i = h, g
γ_j	crossed angle, j = h, o
λ_{jki}	lead angle, j = b, o, p; k = t, n; i = h, g
m_{jki}	module, j = b, o, p; k = t, n; i = h, g
p_{on}	normal circular pitch measured at the operating pitch plane
N_i	number of teeth, i = h, g
E_o	operating center distance
α_{jki}	pressure angle, j = b, o, p; k = t, n; i = h, g
r_{jki}	radius of the pitch circle, j = b, o, p; k = t, n; i = h, g

Subscripts

b	base circle
n	measured in normal section
t	measured in transverse section
o	operating pitch circle
p	pitch circle
h	honing cutter
g	work gear

REFERENCES

[1] F.L. Litvin, "Theory of Gearing," NASA RP-1212 (AVSCOM 88-C-C035), Washington, DC, 1989.

[2] F.L. Litvin, and A. Fuentes, "Gear Geometry and Applied Theory," the second edition, Cambridge University Press, 2004.

[3] J.P. Dugas, "Rotary Gear Honing, The 16th Annual AGMA Gear Symposium, pp. 36–38, April 1988.

[4] J.P. Dugas, "Gear Finishing by Shaving, Rolling & Honing - Part II," Gear Technology, pp. 24–30, June 1992.

[5] K. J. Davis, "Method of Honing a Gear," Utility Patent No. 333,065, 1966.

[6] N.W. Wright, and H. Schriefer, "Basic Honing and Advanced Free- Form Honing," Gear Technology, pp. 26–33, August 1997.

[7] N. Amini, H. Westberg, F. Klocke, and T. K¨ollner, "An Experimental Study on the Effect of Power Honing on Gear Surface Topography," Gear Technol. 16 (1), pp. 11–18, 1999.

[8] T. Yu, Y.X. Qian, K. Dong, and S.Y. Wang, "Improving the Precision of Gear Honing with External Honing Ring Using Diamond Dressing Gear," Advanced Materials Research Vol. 135, pp. 111-115, 2010.

[9] S. P. Santosa, L.C. Brandão, L.H. Gallicchio, and Z.C. Silveira, "Finishing Process Analysis Between Honing and Hard Hobbing in Pinion Gears Applied to a Steering System," Energy Procedia, Volume 14, pp. 2–8, 2012.

[10] D.T. Mehta, and M.G. Rathi, "A Review an Internal Gear Honing," International Journal of Engineering Research & Technology (IJERT), Vol. 2 Issue 5, May 2013.

[11] I.H. Seol, and F.L. Litvin, "Computerized Generation and Simulation of Meshing of Modified Spur and Helical Gears Manufactured by Shaving," Computer Methods in Applied Mechanics and Engineering 190, pp. 5037-5055, 2001.

[12] C.H. Hung, J.H. Liu, S.L. Chang, and H.J. Lin, "Simulation of Gear Shaving with Considerations on Cutter Assembly Errors and Machine Setting Parameters," Journal of Advanced Manufacturing 35 (3–4), pp. 400–407, 2007.

[13] S.L. Chang, H.J. Lin, C.H. Chu, J.H. Liu, and C.H. Hung, "Simulation of Gear Shaving Machine and Tooth Contact Analysis of the Shaved Gears," The IAENG International Conference on Industrial Engineering, Hong Kong, pp. 2187–2192, 2007.

[14] R.H. Hsu, and Z.H. Fong, "Analysis of Auxiliary Crowning in Parallel Gear Shaving," Mechanism and Machine Theory 45, pp. 1298–1313, 2010.

[15] V.T. Tran, R.H. Hsu, and C.B. Tsay, "Tooth Contact Analysis of Double-Crowned Involute Helical Pairs Shaved by a Crowning Mechanism with Parallel Shaving Cutters," Mechanism and Machine Theory, Vol. 79, pp. 198–216, 2014.

[16] R.H. Hsu, and Z.H. Fong, "Novel Variable-tooth-thickness Hob for Longitudinal Crowning in the Gear-hobbing Process," Thirteenth World Congress in Mechanism and Machine Science, Gearing and transmissions, Guanajuato, Mexico, 2011.

[17] R.H. Hsu, and H.H. Su, "Tooth Contact Analysis for Helical Gear Pairs Generated by a Modified Hob with Variable Tooth Thickness," Mechanism and Machine Theory 71: 40–51, 2014.

[18] V.T. Tran, R.H. Hsu, and C.B. Tsay, "Study on the Anti-Twist Helical Gear Tooth Flank With Longitudinal Tooth Crowning," ASME Journal of Mechanical Design, Vol. 136, 2014.

[19] V.T. Tran, R.H. Hsu, and C.B. Tsay, "A Methodology for Longitudinal Tooth Flank Crowning of the Helical Gear on a CNC Honing Machine," to be published on 2014 2nd International Conference on Future Materials Engineering and Industry Application, Hong Kong, 2014.

★★★