DESIGN AND IMPLEMENTATION OF JOINTED ROBOT ARM CONTROL SYSTEM

[1]WAI MAR MYINT, [2]THEINGI, [3]NU NU WIN

Department of Mechatronic Engineering, Mandalay Technological University
The Republic of the Union of Myanmar
E-mail: [1]waimar.hmone@gmail.com, [2]theingi.sa@gmail.com, [3]malnuwin@gmail.com

Abstract—the control of a robotic arm has been a challenge since firstly robot appeared. Now robotic arm is to be developed for working in the industry by picking and placing components. Automatic control of the robotic manipulator involves study of kinematics and dynamics as a major issue. This paper describes the design and implementation of jointed robot arm control system. It consists of three main parts which are MATLAB software implementation, serial interfacing between MATLAB and microcontroller unit and servo motor control. USART data is used as a communication path between the computer and controller. The PC sends the data to control circuit board. The outputs are calculated by main control unit which drive the corresponding servo-motor. PIC16F628A is used as main controller unit. This paper presents various aspects to design a robotic arm control system based on the kinematic modeling. Here, 4×4 homogeneous matrix calculation is used to get angle of arm position to reach any location within the maximum coverage area of robot arm. It can help to know the position of the end-effector. When the system is running, the user can choose the data in textbox for turn the robot arm to specified position. With the help of MATLAB GUI, not only arm moving part can be easily predefined but also arm position can be set up manually. They can be employed in places where precision and accuracy are required.

Index Terms—Controller, jointed arm robot, kinematic modeling, servomotor

I. INTRODUCTION

Automation and robotics are two closely related technologies. Automation can be defined as a technology that is concerned with the use of mechanical, electronic and computer-based systems in operation and control of production [1]. Robot arm is a mechatronic device which converts electric motors into mechanical strength and motion control theory. It is usually used with servo motors to the required position of the arm, and the robot arm is used for many industries. An antenna can be used for human can be safe in the dangerous factory zone. Jointed robot arms are suitable for a wide variety of industrial tasks, ranging from welding to assembly. A jointed robot arm has some rotational axes connecting rigid links and a base. It is sometime called an anthropomorphic arm [2] because it closely resembles a human arm.

In this systems of robot arm is for pick and place function. Calibrate and test the position of servo motors by controller during arm controlling system installation using computer and special software such as MATLAB programs and Mikro C programming. The computer running the calibration software can be connected to either the RS-232 connector on the main circuit board. The microcontroller unit (MCU), located within the printed circuit board (PCB) assembly mounted on the back of the inside the circuit board, controls the operation of the Model PIC16F628A servo Controller. The logic assembly receives operating commands from the host control device or jog commands locally from the unit's robot arm using key. These keys will move the robot's jointed angles when the keys are in the Local position. The user can control on the PIC16F628A to operate the arm directly or a work station control computer via an RS-232 serial link. A serial command set is available for custom monitor and control, enabling to send required point commands to a PIC16F628A controller located up to 180 degree. Included with the unit is PC-based calibration software that performs site calibration of the controller to the robot arm position converter.

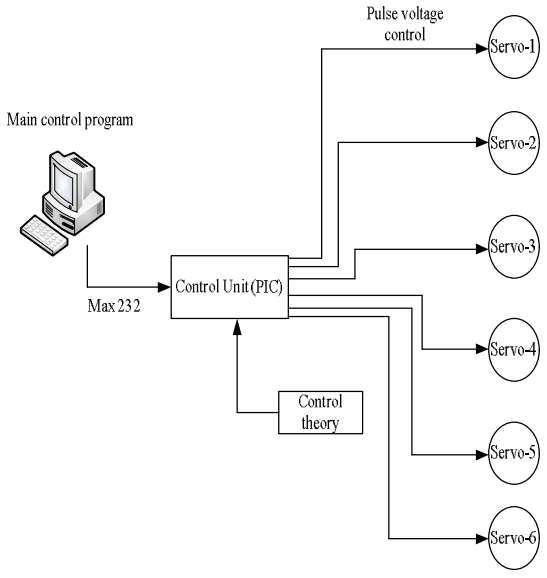

Fig. 1: Block Diagram of Robot Arm Control System

A. Flow Chart of Robot Arm Control System

The user can calibrate the PIC16F628A using a computer connected to the RS-232 port. Programmable hardware and software limits prevent movement of the robot arm beyond physical limits. The PIC16F628A saves calibration data to non-volatile memory for automatic restoration

following a power outage. The PIC16F628A and RS-232 are required for PC-based robot arm controlling.

This paper is organized as follows; the first section is the introduction of the jointed robot arm control system and block diagram description. The section two is circuit operation of jointed robot arm and the third section include the role of kinematic modeling and the next section comprises the experimental result of the system. Section V involves conclusion and future work of the system.

II. CIRCUIT OPERATION OF JOINTED ROBOT ARM

The power supply Robot Arm control system is used 6V (4.5APH). DC 6V is used for all turning servo motors and also used for microcontroller and MAX-232 driver shown in figure2.

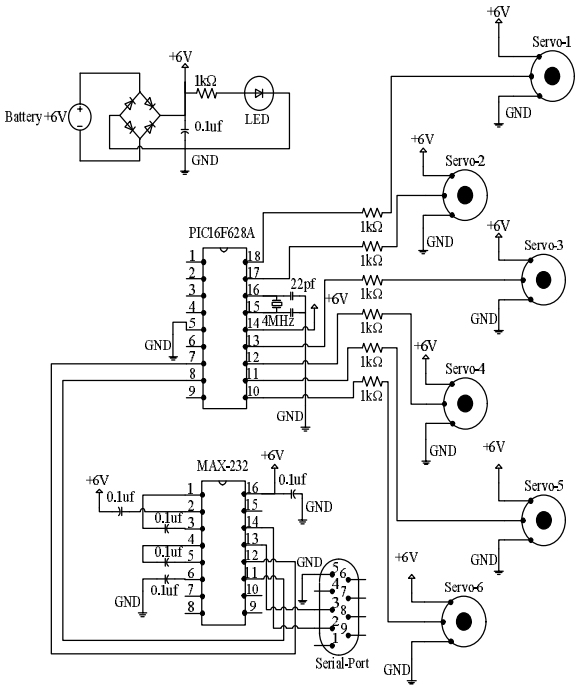

Fig. 2: Overall Circuit Diagram of the Robot Arm

To get voltage stability for system used capacitor (0.1uF) in the output of battery and protects the mistake of user fault by rectifier bridge diode. The positive polarity of capacitors is connected at positive voltage output of battery and negative polarity is at negative output. The power supply pin of PIC is pin.no 14 and connect with +6VDC. Pin.no 5 of controller is connected to the ground. For each servo motor, the power supply pins are connected at DC 6V and data pins are connected to the PIC controller. All data pins of the PIC controller are connected with 1k resistor for limited of Ampere. The PIC controller controls these all servo motor by generating of pulse width modulation function (PWM).

The first servo motor driving pin is connected to pin.no 18 (RA1) of pic microcontroller with specified resistor (1k). The second servo motor driving pin is connected to pin.no 17 (RA0) of pic microcontroller. The third servo motor driving pin is connected to pin.no 13 (RB7) of pic microcontroller. The fourth servo motor driving pin is connected to pin.no 18 (RA1) of pic microcontroller. The fifth servo motor driving pin is connected to pin.no 18 (RA1) of pic microcontroller. The sixth servo motor driving pin is connected to pin.no 18 (RA1) of pic microcontroller.

The power supply pin of MAX 232 is pin.no 16 and ground pin is pin.no 15. This driver has 5 capacitors for understand the USART serial data (TTL) from microcontroller to computer serial data. The capacitors position of MAX 232 are pin.no 1 to pin.no 3, pin.no 16 to pin.no 2, pin.no 4 to pin.no 5, pin.no 6 to ground and pin.no 16 to ground. Each capacitor values are 0.1uF.

The first, signed the variable which is used in specific value (e.g. int, char…..) at the program and then defined the function of pulse width modulation (PWM) and serial interfacing. The function PWM is used to command to rotate the servo motor to specified angle. The function of serial interfacing is used to command to transfer the required data from user (PC). And then signed the used pins which are input pin or which are output pin of the propose system. For serial data, signed the USART function and received the data from interrupt program in microcontroller. Define the baud rate and bit etc. And set the data for the turning servo motors are stable at 90 degree.

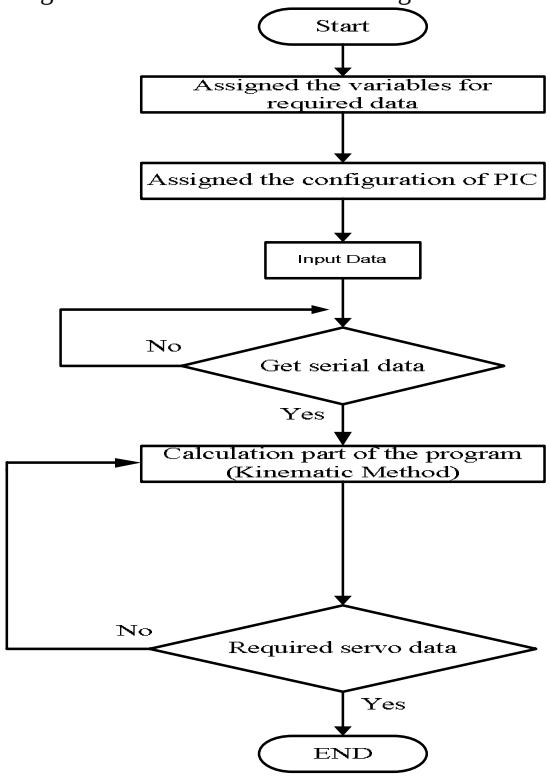

Fig. 3: Program Flowchart of Robot Arm Control Program

The body of the program shown in figure3 is a loop for capture the serial data which is send from the PC by user command. If the serial is been send, the program is converted the data to necessary degree and

calculated the rotation angle. The loop is infinity loop until the PC is not sent the serial data to microcontroller. If the program is received the serial data, calculate the specific angle value and corresponding servo motor. Then decide the direction of robot arm is moved to the desired position and then the arm pick or place the specific object. And then the program is generated the necessary angle for the motor to specific angle.

III. ROLE OF KINEMATIC MODELLING

Using the kinematic model, a programmer can determine the configuration of input reference so that the robot can do coincide movements of all joints to reach the desired position. Kinetic problem consists of forward and inverse kinematics. In this system, Denavid Hertenberg convention and methodology is used to derive its kinematics that helps to find the position and orientation of end-effector with respect to base [3]. The kinematics model of jointed robot arm is shown in Figure4.

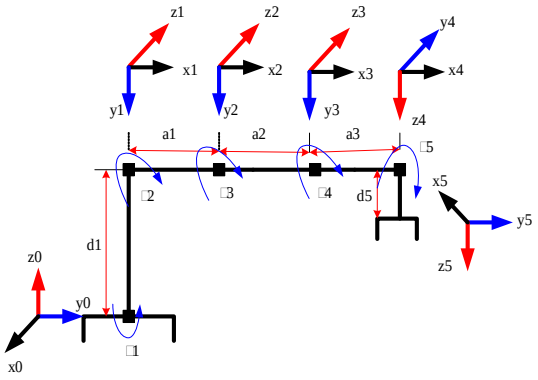

Fig.4: Kinematic Model of Jointed Robot Arm

Table I: Denavid-Hertenberg Parameter for Jointed Robot Arm

Joint No:	Joint angleθ_i	Link twist angleα_i	Link twist length a_i	Link distance d_i
1	θ_1	-90	0	d_1
2	θ_2	0	a_2	0
3	θ_3	0	a_3	0
4	θ_4	-90	a_4	0
5	θ_5	0	0	d_5

Following steps are involved in Denavid Hertenberg Algorithm [6] in direct kinematics modeling method. We calculated the end-effector position by using 4×4 homogeneous transformation matrix [7] as follows:

$$A_{i-1}^{i}=\begin{bmatrix} \text{Cos}\theta_i & -\text{Cos}\alpha_i\text{Sin}\theta_i & \text{Sin}\alpha_i\text{Sin}\theta_i & a_i\text{Cos}\theta_i \\ \text{Sin}\theta_i & \text{Cos}\alpha_i\text{Cos}\theta_i & -\text{Sin}\alpha_i\text{Cos}\theta_i & a_i\text{S}\theta_i \\ 0 & \text{Sin}\alpha_i & \text{Cos}\alpha_i & d_i \\ 0 & 0 & 0 & 1 \end{bmatrix} \quad (1)$$

Substituting the parameters in Table [1] to obtain on transformation matrix A1 to A5:

$$A_0^1=\begin{bmatrix} C\theta_1 & 0 & -S\theta_1 & 0 \\ S\theta_1 & 0 & C\theta_1 & 0 \\ 0 & -1 & 0 & d_1 \\ 0 & 0 & 0 & 1 \end{bmatrix} \quad (2)$$

$$A_1^2=\begin{bmatrix} C\theta_2 & -S\theta_2 & 0 & a_2C\theta_2 \\ S\theta_2 & C\theta_2 & 0 & a_2S\theta_2 \\ 0 & 0 & 1 & 0 \\ 0 & 0 & 0 & 1 \end{bmatrix} \quad (3)$$

$$A_2^3=\begin{bmatrix} C\theta_3 & -S\theta_3 & 0 & a_3C\theta_3 \\ S\theta_3 & C\theta_3 & 0 & a_3S\theta_3 \\ 0 & 0 & 1 & 0 \\ 0 & 0 & 0 & 1 \end{bmatrix} \quad \text{---------- (4)}$$

$$A_3^4=\begin{bmatrix} C\theta_4 & 0 & -S\theta_4 & a_4C\theta_4 \\ S\theta_4 & 0 & C\theta_4 & a_4S\theta_4 \\ 0 & 0 & 1 & 0 \\ 0 & 0 & 0 & 1 \end{bmatrix} \quad \text{---------- (5)}$$

$$A_4^5=\begin{bmatrix} C\theta_5 & -S\theta_5 & 0 & 0 \\ S\theta_5 & C\theta_5 & 0 & 0 \\ 0 & 0 & 1 & d_5 \\ 0 & 0 & 0 & 1 \end{bmatrix} \quad \text{---------- (6)}$$

The general transformation matrix from the first jointed to the last joint of the jointed robot arm can be derived by multiplying all individual transformation matrixes as follows:

$$T_0^5=A_0^1.\,A_1^2.\,A_2^3.\,A_3^4.\,A_4^5 \quad \text{---------- (7)}$$

Where, $S_1=\text{Sin}\theta_1$, $C_1=\text{Cos}\theta_1$, $S_{234}=\text{Sin}(\theta_2+\theta_3+\theta_4)$, $C_{234}=\text{Cos}(\theta_2+\theta_3+\theta_4)$

$$n_x = C_1C_{234}C_5+S_1S_5 \quad (8)$$
$$n_y = S_1C_{234}C_5+C_1S_5 \quad (9)$$
$$n_\delta = -C_{234}C_5 \quad (10)$$
$$o_x = C_1C_{234}S_5+S_1C_5 \quad (11)$$
$$o_y = S_1C_{234}S_5-C\theta_1C\theta_5 \quad (12)$$
$$o_\delta = S_{234}S_5 \quad (13)$$
$$a_x = C_1S_{234} \quad (14)$$
$$a_y = S_1S_{234} \quad (15)$$
$$a_\delta = -C_{234} \quad (16)$$
$$P_x = -d_5C_1S_{234}+a_4C_1C_{234}+a_3C_1C_{23}+a_2C_1C_2 \quad (17)$$
$$P_y = -d_5S_1S_{234}+a_4S_1C_{234}+a_3S_1C_{23}+a_2S_1C_2 \quad (18)$$
$$P_\delta = -d_5C_{234}-a_4S_{234}-a_3S_{23}-a_2S_2+d_1 \quad (19)$$

IV. EXPERIMENTAL TEST AND RESULTS

The following fig.5 is testing with simulation software for jointed robot arm control system and fig.6 is constructed design for control circuit.

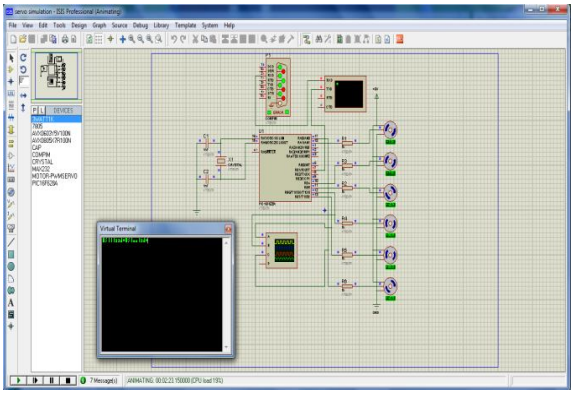

Fig 5: Simulation Test for Jointed Robot Arm Control System

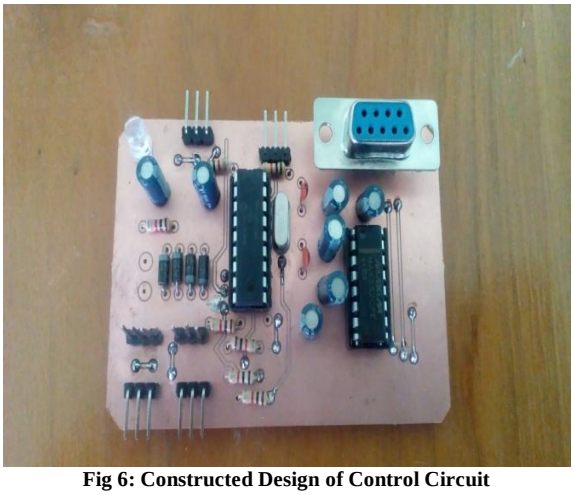

Fig 6: Constructed Design of Control Circuit

In this system, the servo motors were tested using MATLAB GUI software in fig.7 to send commands to the microcontroller which allows the specific data commands to the driver which had one motor connected to change the position according to the command.

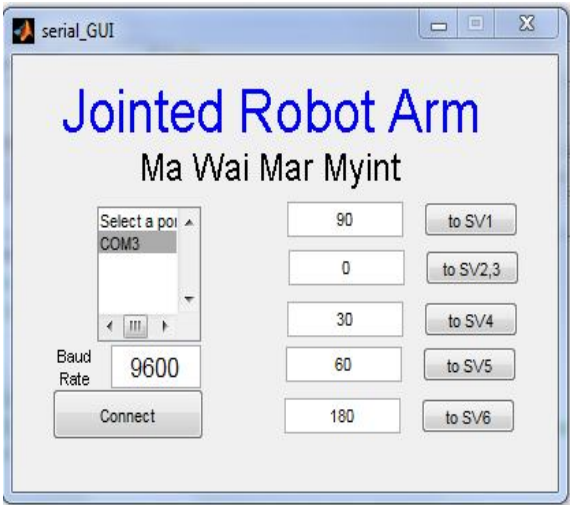

Fig 7: MATLAB GUI for Joint Angle

This table shows the experimental result for home position of robot arm by using MATLAB software output and experimental test.

TABLE II: Result Table for Home Position of Robot Arm

NO	Joint angle	Link Twist angle	Link length (mm)	Joint distance (mm)	X	Y	Z
1	90	-90	0	90	0	122.272	42.500
2	0	0	120	0			
3	30	0	95	0			
4	60	-90	0	0			

CONCLUSION AND FUTURE WORK

These robots have a wide range of industrial applications such as pick and place robots. They can be employed in places where precision and accuracy are required. In this paper, a hardware part of jointed robot arm is implemented using microcontroller PIC 16F628A and each of joint movements are driven by using servo motor. Kinematic modeling method is calculated to get position and orientation of the end-effector with respect to the base. This system can be enhanced to include inverse kinematic solution to get positioning accuracy.

REFERENCES

[1] Erol Uyar, Aytac Goren, ‘‘Combined vision- Robot Arm System for Material Assortment,’’ *Proceeditngs of the 10th Mediterranean Conference on Control and Automation - MED2002 Lisbon, Portugal, July 9-12, 2002.*

[2] M.T.Islam, M.A. Wazed, “Design and Frabrication of a 5 DOF Dexterous Robotic Arm for Industrial Tasks,” *Proceedings of the International Conference on Mechanical Engineering 2007.*

[3] Adelhard Beni R, “*Kinematics of AdeptThree Robot Arm*”, University of Papua, Indonesia, pp: 21-38, 1998.

[4] http://www.chipwinner.com/2007/April/Max232 -single power supply voltage-Rs232 transceiver

[5] http://www.microchip.com/2009/10/PIC16F628A

[6] Janakinandan Nookala, Prudhvi Gogineni, “Kinematic Analysis of 3D.O.F of Robot,” *International Journal of Engineering and Advanced Technlogy (IJEAT)-ISSN:2249-8958,Volume-2, Issue-4,April 2013.*

[7] John Q.Gan, Eimei Oyama, “*A Complete Analytical Solution to the Inverse Kinematics of the Pioneer 2 Robotic Arm*,” Printed in the United Kingdom, Robotica(2005) volume 23,pp.123-129.

★★★