AUTOMATIC TIME COMPENSATION SYSTEM FOR DISPENSER CONTROL UNIT DEPENDING ON TEMPERATURE

[1]NANG KHIN SU YEE, [2]THEINGI, [3]KYAW THIHA

PhD Candidate, Rector
[13]Department of Mechatronic Engineering, Mandalay Technological University, The Union of the Republic of Myanmar
[2]Rector, West Yangon Technological University, The Union of the Republic of Myanmar
Email: [1]nankhinsuyi@gmail.com, [2]theingi.sa@gmail.com

Abstract: This paper intends to construct and design of the automatic time compensation system of dispenser control unit depending on temperature. The fuel volume increases at the temperature above 60F and decreases at the temperature under it. In dispenser control system of retail fuel station, the customers cannot get the exact fuel amount because of weather condition. So the purpose of the research paper is to give a solution to this problem for both customer and dealer. The system will not use any flow rate sensors to measure the fuel flow rate. The fuel amount is controlled by time. Calculation of total time taken for specified fuel amount is considered with effects on not only temperature compensation but also delay time. The time is calculated by using the changed values of volumetric mass density and the flow rate of the pump is considered in this system. In order to control the time taken, MikroC is used for software implementation of the system. PIC16F877A is used as a controller to control the time taken for each data representation customer requests from the keypad and LCD (liquid crystal display) is also used as display unit in this system. And then computer is also used as a control station by using VB.Net.

Keywords: time compensation system, fuel flow rate, controller, and software

I. INTRODUCTION

There are many fuel stations that used flow rate sensors. These stations cannot get the satisfactions both customers and dealers.

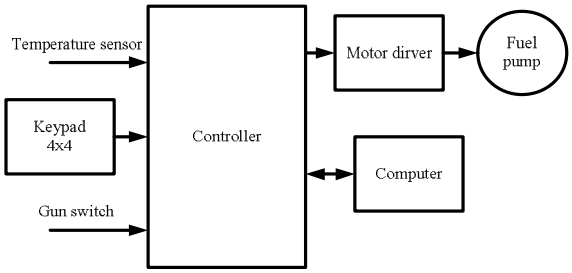

Fig.1 System Block Diagram of the System

Then it has a disadvantage depending on the temperature change. This effect was a worst problem for the region which has so many temperature changes. In nowadays, it is very important to adjust this problem for a developing country.

In order to solve the problem in this system, controller will compensate the fuel volume depending on the temperature changes. PIC16F877A is used as a controller for this purpose. LM35DZ will sense the environmental temperature and then it will send analog signal to the controller as input signal. Depending on the input signals, the controller will control the total fuel pumping time with compensation time. The block diagram of the system is shown as in fig.1.

II. HARD WARE IMPLEMENTATION OF THE SYSTEM

There are many components to consider in dispenser control system. They are pin assignment of the controller, temperature sensor, relay driver and MAX232. So the following circuit implementation will be done. They are

A. Pin assignment of the controller
B. Keypad interface
C. Relay Driver
D. Pin configuration of the Display Unit, and

A. Pin Assign of the Controller

In this control system, the pins of the controller are assigned to interface with keypad, LCD (liquid Crystal Display), temperature sensor, computer, gun input switch and fuel pump for a dispenser control unit.

Bit 2 to bit 7 of PORTD is interfaced with LCD to display the output data on. In order to receive the input data from keypad, it is interfaced with bit 0 to bit 6 of PORTB. And bit 2 of PORTC is used as an input switch of dispenser and bit 6 and bit 7 is also interfaced with computer. RA5 is used as output pin to control the fuel pumps. The pin assignment is expressed in below fig.2.

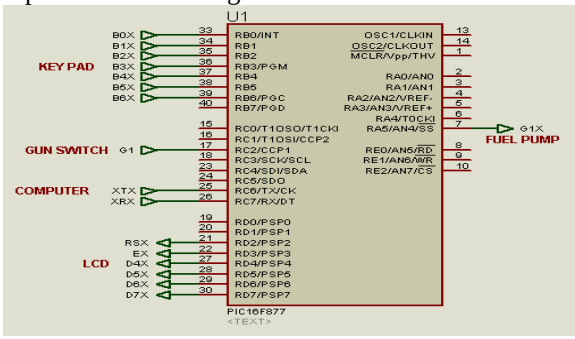

Fig.2 Pin Assignment of the Controller

B. Keypad Interface

In this system, keypad is used as data input for customer request. The controller will control the fuel pump depending on the keypad data. The interfacing between the keypad and controller is shown in Fig.3.

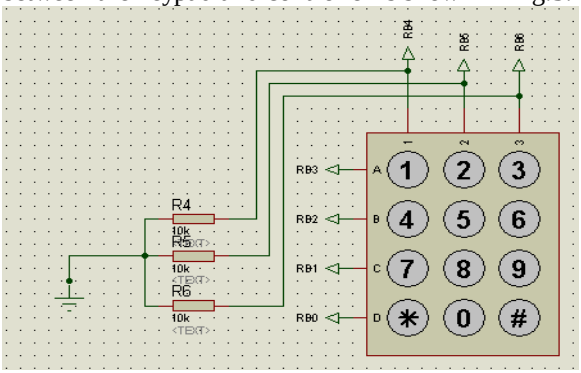

Fig.3 Key Pad Interfacing to Controller

C. Relay Driver

In order to drive the relay, the transistor C9014 is used as a switch. In switching operation, the collector saturation current will be calculated by using the equation:

$$-Vcc + I_{C(sat)} Rc + V_{CE(sat)} = 0. \quad (1)$$

And in order to operate as a switch, the transistor is in the saturated region. So the collector current must be greater than the saturation current. The minimum base current is calculated by using (2).

$$I_{C(sat)} = h_{fe} I_{B(min)} \quad (2)$$

And then the base current and the resistor are very important in this circuit. So the base resistor is also calculated by using (3),

$$-V_{BB} + I_{B(min)} R_B + V_{BE} = 0 \quad (3)$$

When the transistor is in saturated region, the relay will operate to drive the fuel pump motors. The pump driver circuit is expressed in the following.

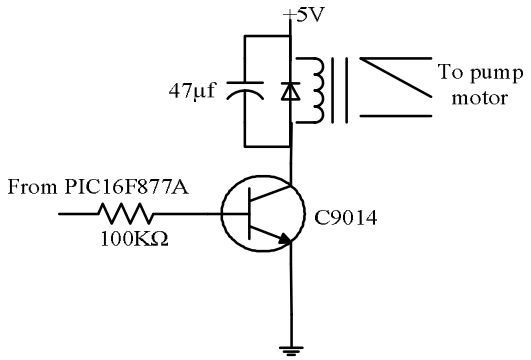

Fig.4 Circuit Diagram of Motor Driver

D. Pin Configuration of the Display Unit

Liquid Crystal Display (LCD) is used to display the amount money and count down. The circuit diagram with the default connections between the LCD and the microcontroller will be shown in the following.

PORTD bit 4 to bit 7 are used for LCD data (i.e. RD7 connected to D7, RD6 connected to D6, etc.), bit 2 of PROTD is connected to the RS pin of the LCD, bit 3 of PORTD is connected to the E pin of the LCD is set for 4- bits of operation.

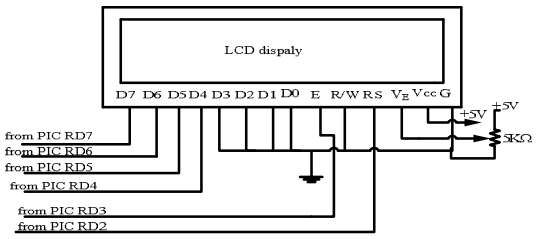

Fig.5 Pin Configuration between the LCD and PIC16F877A

III. DESIGN CONSIDERATION FOR THE SOFTWARE IMPLEMENTATION

The delay time taken from tank to the gun is calculated in this system due to time based control. In order to calculate the time, the pump design and flow rate must be considered.

Taking the flow rate 1000lpm and total height 5.182m (from tank base to gun), the pump horse power is calculated by using (4) with 80% efficiency.

$$\text{Power} = \gamma QH = \rho g QH \quad (4)$$

The horse power, 0.6Hp is got. So the suitable horse power 1Hp is chosen in this system. When the flow rate is rechecked using this horse power, it is flexible in this design. So, flow rate = 1000lpm and horse power of pump = 1Hp (submersible pump) is selected for the system.

And the delay time is calculated by using the continuity equation for two pipes (D_1 =0.051m and D_2 = 0.038m).

$$\text{Delay time, } T = A_1 s_1/Q + A_2 s_2/Q \quad (5)$$

The delay time is 3.8s when calculated using (5).

And, at temperatures cooler than 60□ F or 16□C, the fuel will decrease in volume. By contrast, at temperature above 60□ F or 16□C, the volume of fuel will expand. So there is a disadvantage at some fuel station both customers and dealers. So temperature effect inside the ground tank should be considered to compensate the fuel volume.

For both the customers and dealers, the amount of fuel is compensated with the effect of temperature in fuel storage tank. Fuel-dispensing control unit is controlled by the automatic temperature compensation.

In order to sense the temperature changes, the temperature sensor is used in fuel-dispensing control unit. If the temperature in oil tank changes 10□C, the density will change. Then, the fuel volume increases due to temperature changes; it must be calculated by using (6).

Since $m_{ini} = m_{final}$ (mass),

$$\rho_{ini} V_{ini} = \rho_{final} V_{final} \quad (6)$$

where, $\rho_{ini} V_{ini}$ are the initial values at 16□C.

Volume at 16C, V_{ini} = 1 liter = 10^{-3} m^3

If ΔT is 10C, Δv (volume changes) will be 0.01 x 10^{-3} m^{-3}.

And the volume changes will be 0.01x $10^{-4}m^3$ when the temperature change is 1C.

So let X be the temperature of the gasoline from the temperature sensor inside the tank.

Temperature changes = (X-16) C (from temperature sensor)

Volume changes in (X-16)C of temperature of gasoline

$$= 0.01 \times 10^{-4} (X-16)\ m^3$$

$$V_{com} = 0.01 \times 10^{-4} (X-16)\ m^3 \quad (7)$$

Where, the value of X is the temperature (C) of the temperature sensor. After calculating the fuel volume increase or decrease depending on the temperature in the oil tank, the time taken can be calculated depending on the flow rate of pump used in this system.

Since Volume flow rate of pump, Q = 1000lpm, it takes 0.1s for 1 liter.

For 0.1x10^{-4} (X-16) m^3 volume of gasoline, time compensation will be achieved by using (8).

$$T_{comp} = 100 \times 10^{-6}(X-16)\ s \quad (8)$$

In the control unit, unless flow rate sensors are used, the controller will control the time taken for the specified fuel volume including temperature effect. In order to control the time for the specified fuel, the total time equation can be calculated. So, for the software implementation of the system, the program is written by using (9) in order to control the system correctly.

If Y kyats (monetary unit) are the cost of gasoline for 1 liter, the time must be 0.1s. So the time taken for 1kyat is 0.1/Y s.

And if Z kyats are Customer requests from the keypad (input amount), it can also takes 0.1Z/Y s.

So, the total time is

$$T_{tot} = 0.1Z/\ Y + 100 \times 10^{-6}(X-16) + 3.8 \quad s \quad (9)$$

Where, Z = Customers request from the keypad (input amount "kyats")

Y = the cost of gasoline for 1 liter "kyats"

X = the temperature of the gasoline from the temperature sensor "C"

IV. PROGRAM FLOW CHART

The flow chart is shown in Fig.6 how to operate the system operation. Firstly LCD, keypad and UART is initialized and the controller will read the serial port data of "start signals". If the start signal is actuated, the controller continues to read the keypad signal. In this system, 4x4 keypad is used. A keypad is simply an array of push buttons connected in rows and columns. The key is scanned by bringing each X row low in sequence and detecting a Y column low to identify each key in the matrix. And then if the end input value of keypad is received, the controller is read whether the gasoline gun switches is "ON" or not. If it is "ON", the respectable pump motor rotates with respect to time depending on key and compensation time. The PIC will control depending on the computer command signals. If the "stop signal" is got, the operation will terminate. Otherwise, the operation will do again in the beginning.

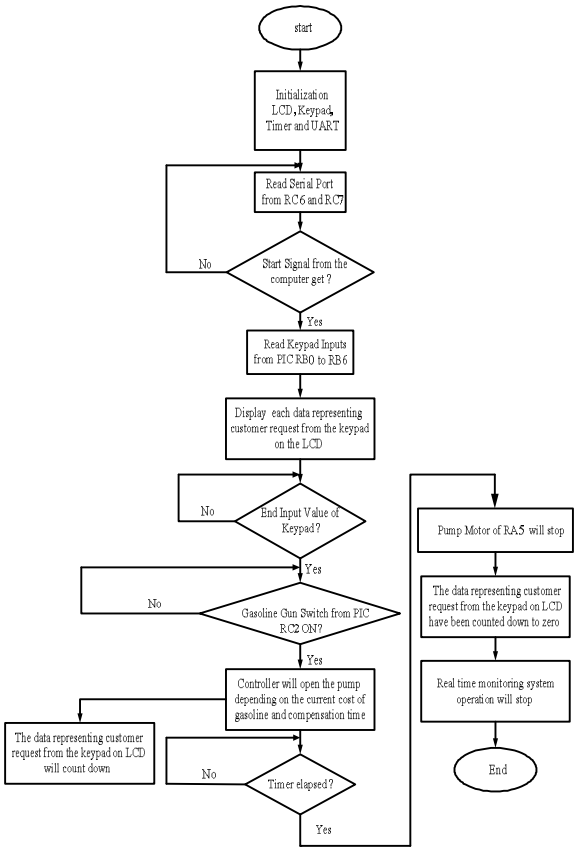

Fig.6 Program Flow Chart of the System

V. RESULTS OF THE SYSTEM

At first, LCD and UART are initialized to begin the system process. And the controller will wait the start signal from the serial port. The statuses of pump motors are controlled by the start signal from the computer.



Fig.7 Decreasing Count to Zero with Accordance with Time Control

In this control system, the main control station is the computer. Only the allowable signal from the computer is got, the controller continues to control the process depending on the gun switch. The "unlock" condition of the controller is displayed on the LCD.

When the start signal is sent from the computer, the welcome message will be displayed on LCD and then pump is ready to pump the fuel depending on the gun switch. And then the costs of the desired fuel must be entered from the keypad.

After the amount money had been pressed on the keypad, the pump motors will drive to pump the fuel. This amount is decreased to zero according to the time taken.



Fig.8 Photo Result of the Dispenser Control Interfacing with Computer

CONCLUSION

The system is flexible both customers and dealers compared to other dispensing units which use the sensor for measuring the oil flow and the system is economy because the system depends on the software. It can be used to dispense any of the fluids (like water, oil, vegetable oil, workshop greases etc...).This system will be more convenience and safety for the customers.

ACKNOWLEDGEMENT

The author is deeply grateful to supervisor Dr. Kyaw Thiha, Associate Professor, Department of Mechatronic Engineering, Mandalay Technological University, for his editing paper and accomplished guidance, his willingness to share his ideas and, helpful suggestions and for his patience, continuous supervision and encouragement during a long period of this paper.

The author also wishes to thank to Dr.Wut Yi Win, Associate Professor and Head, Department of Mechatronic Engineering Mandalay Technological University, for supplying all necessary things.

The author especially appreciates and thanks all her teachers for paper support, and guidance during theoretical study and paper preparation durations.

REFERENCES

[1] Wichit Sirichote, "*MAX232 Level Converter"*, (2002).
[2] Anonymous, +5VPowered RS232, "Transmitters/Receivers Data Sheet", (2005).
[3] Richey, Rodger, Microchip Techology, "*PIC 16F87xA*, Data Sheet", 2003, http//www.microchip.com/pic/16F877.pdf.
[4] Axelson J, "*Serial Port C"*
[5] Subhas C. Mukhopadlyay, Amuroop Gaddam and Anvilus, "RC Mini Relay Controller", (200 anvilus9-at-comcast.net
[6] Rakesh Parekh, **"**AC Induction Motor Fundamentals", 2003 Microchip Technology Inc.
[7] Athena Hessong, eHow Contributor, "How to Calculate Densities at Various Temperatures", 1995-2015, Demand Media, Inc

★★★