ANALYSIS OF ACQUISITION AND TRACKING ALGORITHMS FOR SOFTWARE GNSS RECEIVERS

[1]WIN KAY KHAING, [2]ZAW MIN NAING, [3]SAO HONE PHA, [4]SU SU YI MON, [5]AUNG SOE KHAING, [6]HLA MYO TUN

[1,4,5,6] Electronic Engineering Department, Mandalay Technological University
Myanmar
[2]Deputy Director General, Myanma Scientific and Technological Research Department, Myanmar
[3]Department of Remote Sensing and GNS Lab, Yangon Technological University, Myanmar
Email: [1]kaykhaing26@gmail.com, [2]drzaw290615@gmail.com, [3]saohonepha76@gmail.com
[4]ssyimon@gmail.com, [5]aungsoekhaing@gmail.com, [6]kohlamyotun@gmail.com

Abstract— GNSS (Global Navigation Satellite System) receivers become popular and have been used widely in both civilian and military for navigation, timing and other position related applications. In this paper, the most suitable signal acquisition algorithm for software GNSS receivers is explored based on the platform of MATLAB simulation. Moreover, analysis and comparison of different discriminator functions for signal tracking process are also described. The soft-GNSS receiver includes hardware and software portions. Hardware portion includes an antenna, a RF front-end and an ADC. Software portion for signal processing that runs on PC contains acquisition process, tracking process and navigation process. The test signal is taken from N-FUELS (Full Educational Library of Signals for Navigation) signal simulator which generates digitized intermediate frequency (IF) signal. In this paper, GPS (Global Positioning System) signal is used to analyse and simulate the algorithms. The performance of acquisition and tracking functions can be affected by the value of C/No ratio where C denotes the signal power and N_o is the noise spectral density.

Keywords— acquisition, discriminator function, GNSS, software GNSS receiver, signal simulator, tracking

I. INTRODUCTION

Global Navigation Satellite Systems (GNSS) provide satellite based radio navigation systems coverage over the Earth. This system usually uses satellites placed on medium Earth orbits (MEO) with an approximate altitude of 20 000 km above the Earth's surface. Today, American Global Positioning System (GPS) and Russian GLObal NAvigation Satellites System (GLONASS) are fully operational global navigation satellite systems.

The revolution period for GPS is about 11 hours 58 minutes and that for GLONASS is about 11 hours 16 minutes. European GNSS Galileo and Chinese (Compass) systems are under development. These systems provide ranging services for users by measuring distance to the satellite at each moment of time. The satellites also transmit correct information about them for their ranging service by embedding in the satellite signal [1].

There are three main segments in GNSS system. They are space segment, control segment and user segment. Space segment is composed of 24 satellites orbiting in 6 different orbit planes inclined at about 55°. The satellites are currently emitting signals propagated on carriers L1, L2, L5, E1, E5, E6 and so on.

This paper focus only on L1 carrier band for GPS signal. The centre frequency of L1 carrier band is 1575.42MHz and type of modulation is QPSK. The in-phase channel is modulated by a known Gold code of length 1023 (Coarse Acquisition (C/A) code) with a rate of 1.023MHz. The quadrature channel is modulated by a known P code (Y code) with a rate of 10.23MHz [2].

The control segment is composed of one main control station called the Master Control Station (MCS) located in Colorado and 4 download stations scattered around the globe. User segment contains Standard Positioning Services (SPS) and Precise Positioning Services (PPS) [2].

II. SOFTWARE GNSS RECEIVER ARCHITECTURE

The complete architecture of software GNSS receiver consists of an antenna, RF front-end device and software portion for processing. The hardware RF front-end device down-converts the radio frequency GNSS signals to an intermediate frequency (IF), samples the IF signals and digitizes them. In this paper, N-FUELS signal simulator is used instead of the real front-end device.

Software processing portion consists of three main modules: signal acquisition module, signal tracking module and navigation module for user position. Acquisition and tracking are synchronization modules of the receiver and their accuracy is very important for exact location. This paper emphasizes on acquisition and tracking modules. The architecture of a complete software receiver is shown in Fig. 1.

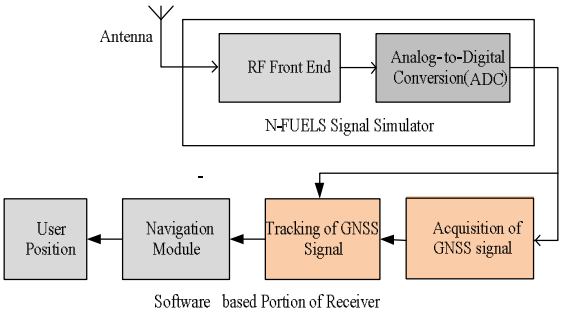

Fig. 1 Architecture of Software GNSS Receiver

III. GNSS SIGNAL ACQUISITION

A generic GNSS receiver use an acquisition module to detect the presence of the signal in space in order to track and decode the information transmitted by the satellites. For each satellite, the acquisition module provides the tracking loops with a coarse estimation of the received code delay, with an uncertainty of less than half a chip and a rough estimation of the Doppler frequency shift. During the software receiver development, different acquisition methods were implemented and simulated. Their performances are analysed on the basis of computational load, sensitivity related to the signal-to-noise ratio and accuracy. According to the literatures, there are three main acquisition methods. They are acquisition in time-domain (serial method), acquisition in frequency domain employing parallel FFT and acquisition in time-domain employing parallel FFT. In this paper, acquisition in time-domain employing parallel FFT method is chosen and analysed based on its very fast computation speed.

The raw GPS signal from N-FUELS simulator has intermediate frequency of 4.152MHz which is suitable for software receivers. The sampling frequency is at least twice of the IF values. Thus, the value of sampling frequency is 16.368MHz and quantization value is eight bits per sample. Fig. 2 shows a raw GPS signal output from the signal simulator.

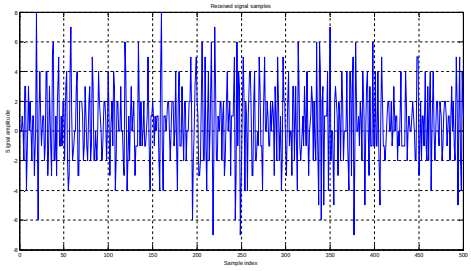

Fig. 2 Raw GPS Signal, N-FUELS Signal Simulator Output

A. Acquisition in Time-Domain employing parallel FFT

GNSS signal is composed of three main components: carrier, ranging code and navigation message. The RF signal is down-converted and digitized to the digital IF signal. This signal contains the Doppler frequency and relative code shift due to the effect of relative motion of satellite and receiver. The satellite signal model before the state of down-conversion is

$$y_{RF,i}(t) = \sqrt{2P_R}\,c_i(t-\tau)d_i(t-\tau)\cos(2\pi(f_{RF}+f_d)t+\varphi) \quad (1)$$

and after the state of down-conversion is

$$y_{IF,i}(t) = \sqrt{2P_R}\,c_i(t-\tau)d_i(t-\tau)\cos(2\pi(f_{IF}+f_d)t+\varphi) \quad (2)$$

After digitizing, the model is as follow:

$$y_{IF,i}[n] = \sqrt{2P_R}\,c_i(nT_s-\tau)d_i(nT_S-\tau)\cos(2\pi(f_{RF}+f_d)nT_s+\varphi) \quad (3)$$

Where τ is delay, P_R is signal power, f_d is Doppler frequency and T_s is sampling time. Acquisition module searches for approximate values of (τ , f_d). Since the sampling frequency is 16.3676MHz, 16367 samples are correlated at a time corresponding to 1ms. Fig. 3 shows the block diagram of acquisition in time domain employing parallel FFT method.

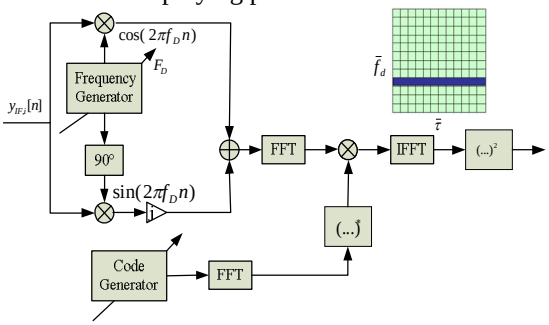

Fig. 3 Block Diagram of Acquisition in Time Domain Employing Parallel FFT Method

CAF (Cross Ambiguity Function) is done between incoming signal and local.

$$R_{y,r}(\bar{\tau},\bar{f}_d) = \sum_{n=0}^{L-1} y_{IF}[n]c_i(nT_s-\bar{\tau})\exp(j2\pi(f_{IF}+\bar{f}_d)nT_s) \quad (4)$$

And then, the function evaluated in the Search Space is as follows:

$$S^2_{y,r}(\bar{\tau},\bar{f}_d) = \left|Ry,r(\bar{\tau},\bar{f}_d)\right|^2 \quad (5)$$

B. Acquisition Results

The simulation result using GPS signal of satellite PRN 21 is shown Fig. 4. The total amount of operation time is 3.036seconds. The corresponding estimated code delay is 8368 and Doppler frequency shift is located at bin 23. Therefore, Doppler frequency value is (23-20)*500 = 1.5 kHz. Moreover, the value of the signal to noise ratio effect on the performance of acquisition results. The larger value of C/No leads to get better performance in acquisition of GNSS receivers. If C/No value is small, the highest peak of the acquisition is not clear and the two parameters (time delay and Doppler frequency) are not precise as in the case of larger C/No values. In this analysis, the value of C/No used is 50dBHz.

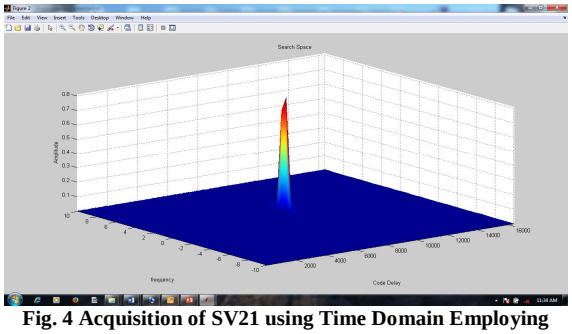

Fig. 4 Acquisition of SV21 using Time Domain Employing Parallel FFT Method

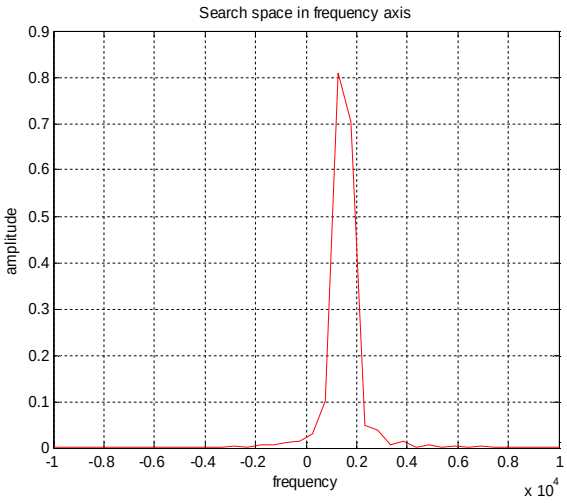

Fig. 5 Doppler frequency Plot (Time Domain Employing Parallel FFT Method)

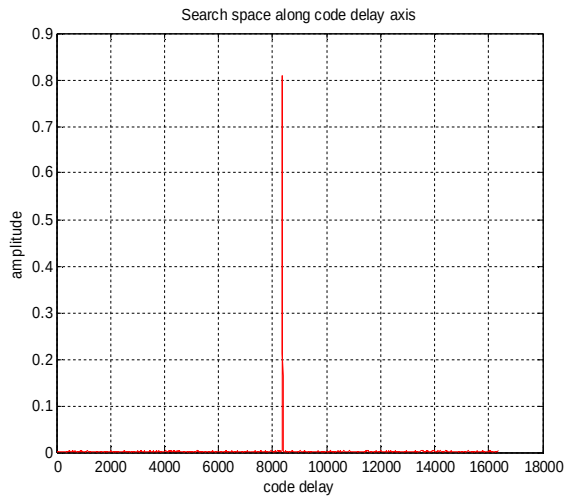

Fig. 6 Code Delay Plot (Time Domain Employing Parallel FFT Method)

Fig. 5 and 6 show the plots of 1-D search functions along Doppler frequency axis and code delay axis. The width of search space in frequency domain is nearly equal to 1.5 kHz which is exactly the same with the value of Doppler frequency from N-FUELS signal simulator.

Table I shows the comparison of operation time (in seconds) of the three acquisition methods. According to this table, acquisition in time domain employing parallel FFT method is the most suitable method for software GNSS receivers for it's the fastest speed and the most accurate results in Doppler frequency and delay chips value.

TABLE I
COMPARISON OF ACQUISITION SPEED

Acquisition Algorithm	Operation time in seconds	
	Single Frequency Point	All 40 Frequency Points
Acquisition in time-domain (Serial Method)	2.676	107.027
Acquisition in frequency-domain employing parallel FFT Method	2.154	86.141
Acquisition in Time-domain employing parallel FFT Method	0.0759	3.036

IV. GNSS SIGNAL TRACKING

The second synchronization process, tracking-stage, aims at resolving the error for precision. The remaining error after the acquisition-stage is still too large for final pseudorange calculation. Therefore, a fine-tuning process, "code and carrier tracking" process, is needed. This is a two-way search by shifting the local replica forward and backward. Signal tracking module starts its function by using the estimated values obtained from the acquisition module. Fig.7 shows a high-level block diagram of a typical global navigation satellite system receiver tracking loop. It consists of a double-closed loop which is made of a Delay Lock Loop (DLL) for code tracking and a Phase Lock Loop (PLL) for carrier tracking (typically a Costas Loop) [4].

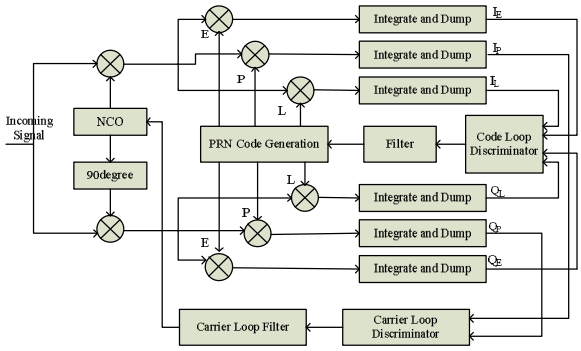

Fig. 7 Block Diagram of a Typical GNSS Receiver Tracking Loop

C. Code Tracking

Early-Late code tracking method is used in the implementation of code tracking block in software GNSS receivers. Correlations with three different

generated codes known as the early (E), the prompt (P), and the late (L) codes are involved in the tracking. Before the correlation, the code tracking block needs a carrier input for the reason of removing the carrier component from the signal. The carrier tracking block supplies the carrier input to the code tracking block. The PRN code generator is provided with the outputs from the six correlators so that the code phase from the PRN code generator will be properly adjusted. A code loop discriminator is used to compute the input to the code generator [5]. This paper emphasizes on the performance analysis of Delay Lock Loop for GNSS receivers by using the well-known S-curves, function characteristic of the DLL discriminator. There are several types of DLL discriminators according to the literatures [6]. Table II shows four main types of non-coherent DLL discriminators. The discriminator output is an error value between early and late correlation values. If the error value is zero, the signal is completely synchronized.

TABLE II
FOUR MAIN TYPES OF NON-COHERENT DLL DISCRIMINATORS

No	Type (Non-coherent)	Discriminator or S-curve
1	Dot product power	$\sum(I_E - I_L)I_P + \sum(Q_E - Q_L)Q_P$
2	Early minus late power	$\sum[(I_E)^2+(Q_E)^2]- \sum[(I_L)^2 + (Q_L)^2]$
3	Early minus late envelope	$\Sigma\sqrt{\left[(I_E)^2+(Q_E)^2\right]}-\Sigma\sqrt{\left[(I_L)^2+(Q_L)^2\right]}$
4	Early minus late envelope normalized	$\frac{\Sigma\sqrt{\left[(I_E)^2+(Q_E)^2\right]}-\Sigma\sqrt{\left[(I_L)^2+(Q_L)^2\right]}}{\Sigma\sqrt{\left[(I_E)^2+(Q_E)^2\right]}+\Sigma\sqrt{\left[(I_L)^2+(Q_L)^2\right]}}$

Where I_E, I_L, I_P, Q_E, Q_L, and Q_P represent the early, late and prompt correlation values for the in phase and quadrature components of the received signal.

D. Performance Analysis of Discriminator Outputs for Code Tracking Loop

Tracking module can achieve good performances by using the narrow correlator spacing parameter. The basic feature of exact positioning result is the distance between the Early and Late replicas (spacing). Fig. 8, 9 and 10 show the DLL discriminators curves with different Early-Late spacing parameters. These results are not taken into account of C/N_o values. According to these curves, DLL with larger spacing can handle wider dynamics and more noise robust. On the other hand, DLL with a smaller spacing is more precise because the noise is also reduced.

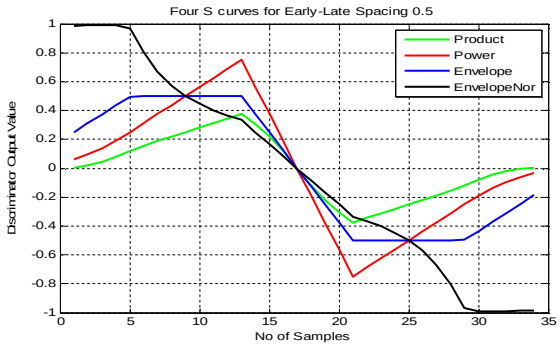

Fig. 8 Comparison of Different DLL Discriminators Output for Early-Late Spacing 0.5

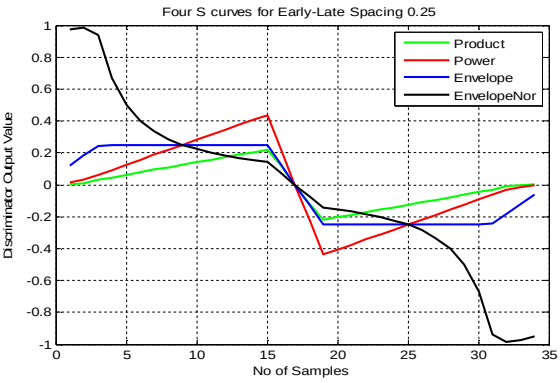

Fig. 9 Comparison of Different DLL Discriminators Output for Early-Late Spacing 0.25

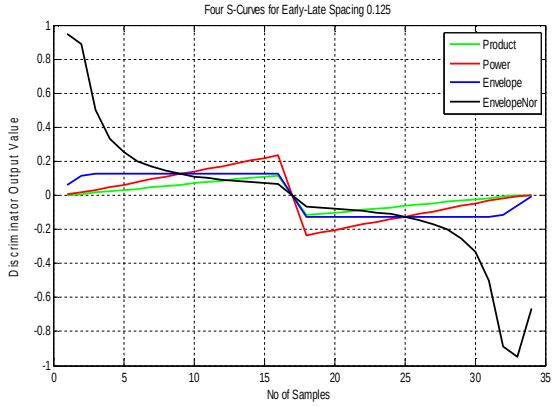

Fig. 10 Comparison of Different DLL Discriminators Output for Early-Late Spacing 0.125

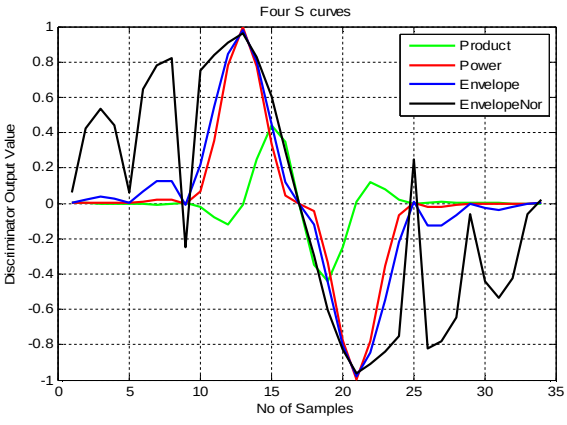

Fig. 11 Comparison of Different DLL Discriminators Output for C/N_o = 36 dBHz

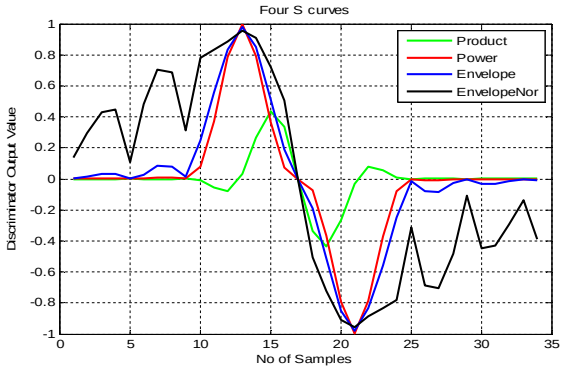

Fig. 12 Comparison of Different DLL Discriminators Output for C/N_o = 50 dBHz

The results which are taken into account of C/N_o values are shown in Fig. 11 and 12. They use the same sampling frequency and the same Early-Late spacing. Therefore, the shape and slope of the S curves are not different much. But, the larger the signal to noise ratio, the smoother the S curve which shows the more precision in DLL.

CONCLUSION

This paper has been presented the performance analysis of acquisition and tracking algorithms for software GNSS receivers. The three acquisition algorithms are compared by using the operation speed. According to the comparison, acquisition in time domain employing parallel FFT method is the best for software receivers for its fastest speed. Moreover, the larger value of C/No makes the performance in acquisition of GNSS receivers better.

All of the experiments have been done with the help of MATLAB software Environment and N-FUELS signal simulator. Doppler frequency and code delay are calculated using acquisition in time domain employing parallel FFT method. The corresponding estimated code delay is 8368 and Doppler frequency value is (23-20)*500 = 1.5 kHz. The second part of this paper is analysis of tracking module especially in code tracking. The performance of the code tracking loop depends on the output of the code loop discriminator. The effect of the different Early-Late spacing parameters and the effect of different C/N_0 ratios on the discriminator output are discussed and analysed. According to the analysis, the smaller Early-Late spacing is more precise and more suitable for software GNSS receivers. Moreover, the larger C/No value is more precise for delay lock loop of software GNSS receivers. Results show that satisfactory precision can be achieved if the value of C/No is above 36dBHz. This concepts of signal processing can be applied in any software GNSS receiver design. They provide the best results for further processing such as bit synchronization, frame synchronization, navigation message decoding and positioning analysis.

ACKNOWLEDGMENT

The author wishes to express deep thanks to her supervisor Prof. Dr. Zaw Min Naing, Deputy Director General, Myanma Scientific and Technological Research Department Myanmar, for his great supervision and encouragement. The author would like to express her sincere gratitude to her co-supervisors Dr. Su Su Yi Mon and Dr. Aung Soe Khaing and next to Dr. Hla Myo Tun, Head of Electronics Engineering Department, Mandalay Technological University, for their suggestions and true-line guidances. Moreover, the author wishes to show her heartfelt appreciation to Dr. Sao Hone Pha, Department of Remote Sensing and GNS Lab, Yangon Technological University, for what his truely great guidance.

REFERENCES

[1] "Digital Satellite Navigation and Geophysics", A Practical Guide with GNSS Signal Simulator and Receiver Laboratory by IVAN G. PETROVSKI, IP-Solutions, Japan TOSHIAKI TSUJII Japan, Aerospace Exploration Agency (JAXA).

[2] "Introduction to Global Navigation Satellite Systems" edited by: Fabio Dovis, Paolo Mulassano.

[3] "Theoretical Analysis of S-Curve for GNSS System," by Maristella Musso, Gianluca Gera, Carlo S. Regazzoni, Department of Biophysical and Electronic Engineering (DIBE), University of Genoa Italy and CNIT-DIBE Unit University of Genova.

[4] "*A Software-Defined GPS and Galileo Receiver: Single-Frequency Approach*," by Kai Borre, Aalborg University and Dennis Akos, University of Colorado.

[5] "The GPS Code Software Receiver at Aalborg University," by Nicolaj Bertelsen, Kai Borre, Peter Rinder, at Danish GPS Center, Aalborg University, Niels Jernes Vej 14, DK-9220 Aalborg Ø, Denmark, {nb,borre,rinder}@gps.aau.dk.

[6] "Implementation of a Software GPS Receiver," by C. Ma, G. Lachapelle, and M.E. Cannon, Position, Location And Navigation (PLAN) Group, Department of Geomatics Engineering, University of Calgary, Calgary, Alberta, Canada, T2N 1N4.

[7] Dinesh MANANDHAR, Yongcheol SUH and Ryosuke SHIBASAKI, "*GPS Signal Acquisition and Tracking: An Approach towards Development of Software-based GPS Receiver*," Center for Spatial Information Science, The University of Tokyo, 4-6-1 Komaba, Meguro-ku, Tokyo, 153-8505 Japan.

[8] R. Arsinte, "*A Software Model for GPS Receiver Signal Processing Blocks Used in Educational Environment*," Technical University of Cluj-Napoca, Communications Department, 26-28 Baritiu Str, Cluj-Napoca, Romania, Radu.Arsinte@com.utcluj.ro.

[9] "Simulation of Code Tracking Error Variance with Early Late DLL for GALILEO/GPS Bandlimited Receivers," by Ondrej Daniel, Martin Ernesto Orejas, Juraj Gazda, Honeywell Advanced Space Technology, Tuřanka 100, Brno, Czech Republic, Dept. of Multimedia Comm., Technical University of Košice, Letná 9, Košice, Slovakia.

[10] Hui Hu, and Lian Fang, "*Signal Search and Acquisition Algorithms for Software GPS Receiver*," Proceedings of the 2009 International Symposium on Information Processing (ISIP'09), Huangshan, P.R. China, August 21-23, 2009, pp. 013-016.

[11] "*GPS Satellite Signal Acquisition and Tracking*," by Fredrik Johansson, Rahman Mollaei, Jonas Thor, Jorgen Uusitalo, August 21, 1998.

[12] "*Fundamentals of Global Positioning System Receivers: A Software Approach*," by James Bao-Yen Tsui, Copyright @ 2000, John Wiley & Sons, Inc. Print ISBN0-471-38154-3, Electronic ISBN0-471-20054-9.

[13] "*IF GPS Signal Simulator Development and Verification*," (URL: http://www.geomatics.ucalgary.ca/links/GradTheses.html) by Lei Dong, December 2003.

[14] "*Signal Acquisition and Tracking for a Software GPS Receiver*," by Sophia Y. Zheng, February, 2005, Blacksburg, Virginiaa.

J.A. Starzyk and Z. Zhu, "*Averaging Correlation for C/A Code Acquisition and Tracking in Frequency Domain*," School of Electrical Engineering and Computer Science, Ohio University, Athems, Ohio 45701, USA.

★★★