VECTOR QUANTIZATION-BASED SPEECH RECOGNITION SYSTEM FOR HOME APPLIANCES

[1]AYE MIN SOE, [2]MAUNG MAUNG LATT, [3]HLA MYO TUN

[1,3]Department of Electronics Engineering, Mandalay Technological University, The Union of the Republic of Myanmar
[2]Department of Electronics Engineering, Technological University (Taungoo), The Union of the Republic of Myanmar
Email: [1]starlay04@gmail.com, [2]mgmglatt2020@gmail.com, [3]kohlamyotun@gmail.com

Abstract— The highest purpose of this paper is to develop a speech recognition system. This system is used to control smart home usages by spoken words. The spoken words "Fan On", "Fan Off", "Light On", "Light Off", "TV On" and "TV Off" are chosen for speech recognition. The speech signals are taken as input of the system to control home appliances. The system has two main parts: speech recognition and electronic control system for smart home appliances .Speech recognition is implemented in MATLAB environment. In this process, it is composed of two core modules: feature extraction and feature matching. Coefficient features are extracted by using Mel Frequency Cepstral Coefficients (MFCC) and Vector Quantization (VQ) is used to match new features from old features. RF module is used to carry command signal from PC to microcontroller wirelessly. PIC16F887 Microcontroller is connected to driver circuit for relay and motor. The input commands are recognized very well. The system is a good performance to control smart home appliances by spoken words. And also this system is used to control the speed of the motor by speech. This system can also be applied in many applications such as industry, hospital and university.

Index Terms—MATLAB Speech recognition, Feature Extraction, Feature Matching, Mel Frequency Cepstral Coefficient (MFCC), Vector Quantization (VQ),PIC16F887

I. INTRODUCTION

In today's world technology is available for home automation but these technologies are incompatible with each other and addresses only communication and physical media. Speech Recognition is a technology allowing the computer to identify and understand words spoken by a person using a microphone or telephone. The user can easily control home appliances with speech. This technology may also be applied to many other daily used devices to enhance the life quality. Home automation is a wide and varied field that involves devices as small as temperature, light and motion sensor, and as powerful as modern home appliances. Using a set of pre-programmed commands and instructions, user can talk with computer.

Computer system that understands input speech enables user to have conversations with the computer. User and the computer speaking as commands or in response to events, input, or other feedback would be included in these conversations. Speaking is easier and more sensitive than selecting buttons and menu items. Human speech has changed over many thousands of years to become an efficient method of sharing information and giving instructions. [1]. Speech Recognition is a technology allowing the computer to identify and understand words spoken by a person using a microphone or telephone. Using a set of pre-programmed commands and instructions, user can talk with computer. Computer system that understands input speech enables user to have conversations with the computer.

The goal of this paper is to implement smart home appliances controlled system that can be operated by spoken words. The spoken words chosen for recognition are "Fan On", "Fan Off", "Light On", "Light Off", "TV On" and "TV Off". This system consists of two components. They are speech recognition system and control system. The block diagram of home appliances control system for speech recognition is illustrated in Fig.1. In this diagram, speech instruction is firstly taken as input to control home appliances and then a microphone is used to record the person speech. Secondly, the speech instruction is caught and transferred the analog signal to digital signal and the recorded speech is sent to the speech based verification/identification system. Thirdly, the digital information of speech instruction is processed and compared by using the MATLAB programming. Fourthly, the digital information of speech instruction is outputted through USB port. Finally, PIC receives data from speech recognition block and gives instructions to control home appliances.

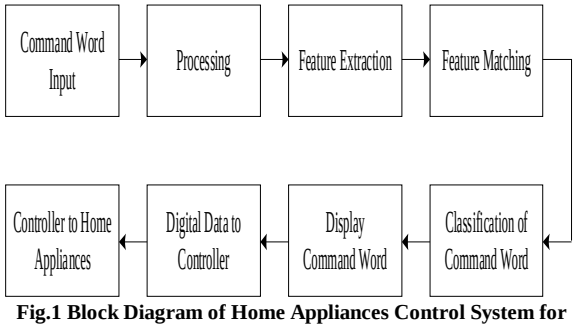

Fig.1 Block Diagram of Home Appliances Control System for Speech Recognition

II. SPEECH RECOGNITION SYSTEM

The speech algorithms consist of two main portions. They are feature extraction and feature matching.

A. Feature Extraction

The Feature extraction is the most important part of speech recognition as it distinguishes one speech from other. The utterance can be extracted from a vast range of feature extraction techniques suggested and successfully utilized for speech recognition task. MFCCs are commonly used as features in speech recognition systems, such as the systems which can automatically recognize numbers spoken into a telephone. Mel-frequency cepstral coefficients (MFCC) is used for feature extraction. The Mel-frequency cepstral coefficients (MFCCs) are frequently used as a speech parameterization in speech recognition. The speech input is recorded at a sampling rate of 441000Hz.This sampling frequency is chosen to minimize the effects of aliasing in the analog-to-digital conversion process. In this paper, the Mel frequency Cepstrum Coefficient (MFCC) feature is used for feature extraction. The extracted speech features (MFCC□s) are quantized to a number of centroids using vector quantization algorithm. These centroids constitute the codebook of the speech. MFCC□s are calculated in training phase and again in testing phase.

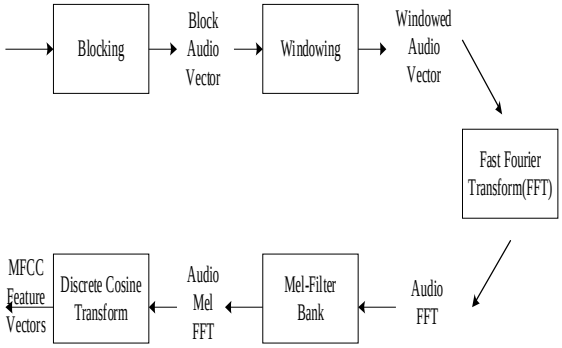

Fig.2 Block Diagram of MFCC Feature Extraction

B. Feature Matching

The Feature matching involves the extracting of data from an unknown speech and comparing it with a set of previously stored data. Vector Quantization (VQ) is applied for feature matching. Vector Quantization (VQ) is a classical quantization technique from signal processing which allows the modelling of probability density functions by the distribution of prototype vectors. Vector Quantization (VQ) approach is applied for training and classification phase. Firstly, the training set of vectors is used to create the optimal set of codebook vectors for representing the spectral variability observed in the training set.

And Then distance is measured between a pair of spectral analysis vectors to able to cluster the training set vectors as well as to classify spectral vectors into unique codebook entries. The next step is a centroid computation procedure. Finally, a classification procedure selects the codebook vectors that closet to the input vector and uses the codebook index as the resulting spectral representation. The classification procedure is essentially a quantizer. It accepts speech spectral vectors as input and provides the code index of the code vectors that best matches the input.

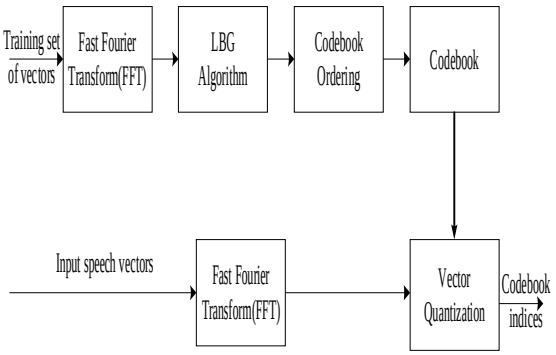

Fig.3 Block Diagram of the VQ Training and Classification Phase

III. CONTROL SYSTEM

The control system consists of two sections: transmission section and receiving section.

C. Transmission section

In the transmission section, the main components are KS232 module, PIC 16F887 and KST-TX01 (Radio Frequency transmitter module). The KS232 module is used to carry the signal from PC to Microcontroller unit. The signal is retransmitted with baud rate 1200 for RF transmission by KST-TX01 module. This module has four pins: supply pin, data pin, GRD pin, and ANT pin. KST-TX01 technical specific data for wireless transmitter module are (1) transmit power:1W ,(2)operating frequency:315MHZ~433.92MHZ, (3)operating temperature:-40℃~80℃ ,(4)operating voltage: 3V~5V and (5) modulation type: ASK.

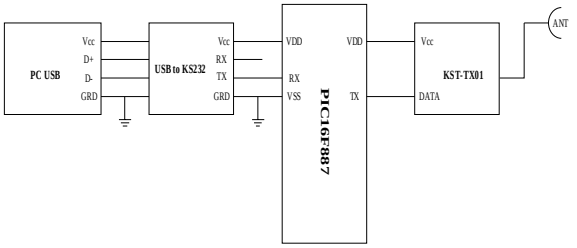

Fig.4 Circuit diagram of transmission section

D. Receiving section

The receiving section consists of KST-RX706 (RF receiver module), PIC microcontroller, relays, relay drivers and motor driver. In this section, KST-RX706 firstly accept radio signal and then microcontroller read radio signal with baud rate 1200.

Microcontroller drives relay and motor driver. The speed of motor is controlled by using Pulse Wide Modulation (PWM) module. Pulse-width modulation (PWM), as it applies to motor control, is a way of delivering energy through a succession of pulses rather than a continuously varying (analog) signal. By increasing or decreasing pulse width, the controller regulates energy flow to the motor shaft. The motor's own inductance acts like a filter, storing energy during the "on" cycle while releasing it at a rate corresponding to the input or reference signal. In other words, energy flows into the load not so much the switching frequency, but at the reference frequency.

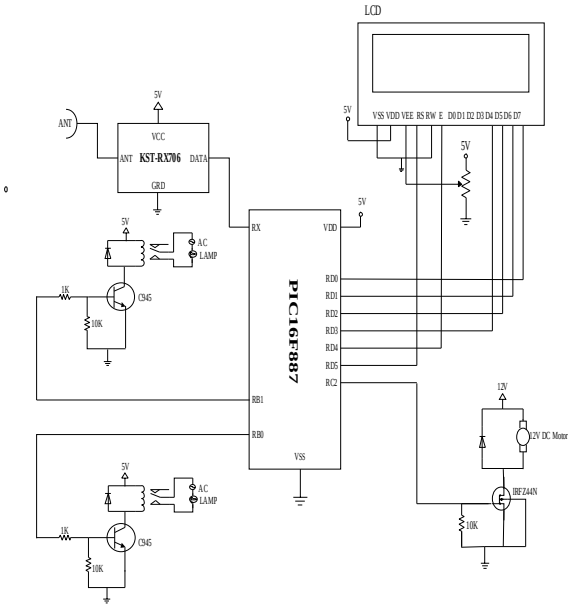

Fig.5 Circuit Diagram of Receiving Section

IV. SOFTWARE IMPLEMENTATION

In this fig.6, there are three portions as like button, namely: feature extraction, codebook, and test. Firstly, the button of feature extraction is on, speech signal waves and spectrograms of each of speech signals are shown in the right of figure. Secondly, codebook button is on, feature coefficients of each of speech signals are shown as a table. Above processes are called training phase. If speech signal is tested, test button is on.

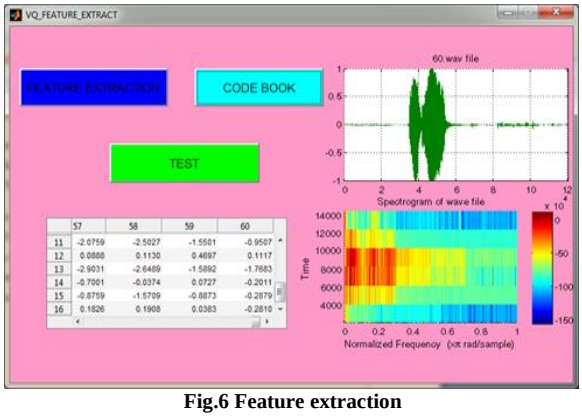

Fig.6 Feature extraction

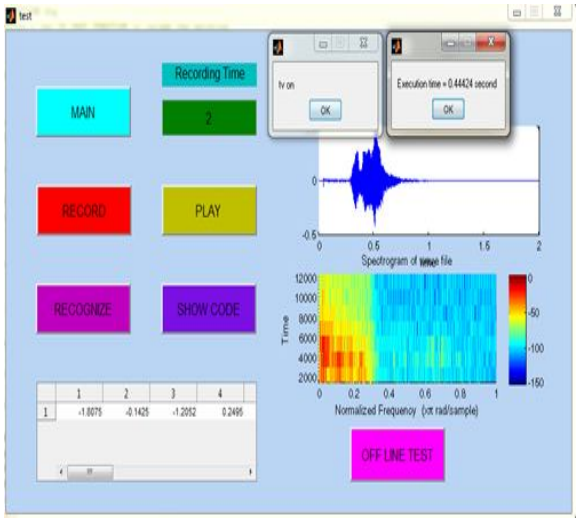

Fig.7 Result when speaking "TV on" in real time

In fig 8, when the user speaks "TV ON" command from microphone, the command is recognized by personal computer using MATLAB software. The recognized command word is input into microcontroller through USB port. In microcontroller, "TV ON" command word is assigned as character "a". When character "a" is transmitted to one microcontroller, another microcontroller receives the character "a". And then the signal is driven relay driver to turn on TV.Fig.9 shows the result of "Light On" command word. "Light On" command word is given as the character "c" in microcontroller and "Fan On" command word as the character "e".

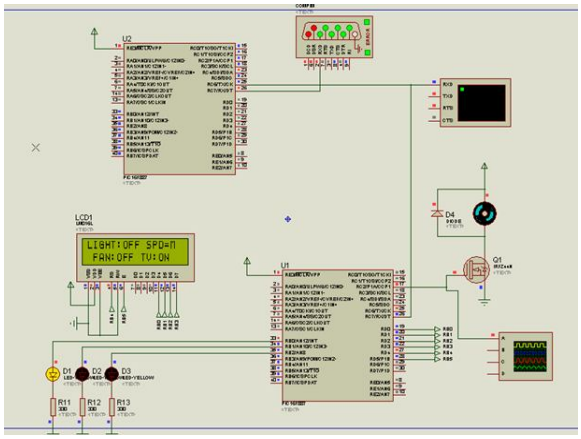

Fig. 8 Screen shot of "TV On" command in mikcro C

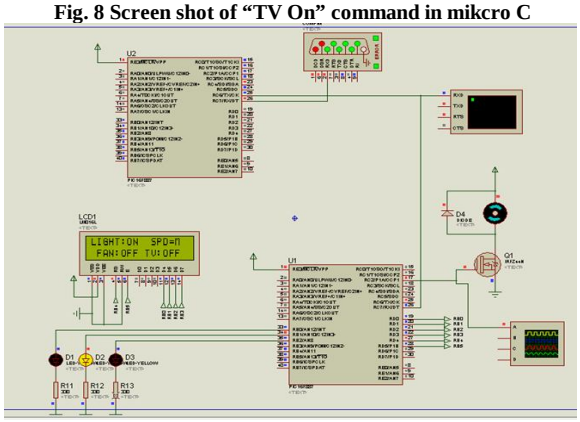

Fig. 8 Screen shot of "Light On" command in mikcro C

RESULT AND DISCUSSION

Before testing the real time communication between transmission and receiving section, PIC to PIC serial communication is tested firstly. Figure 6 shows simulation of PIC to PIC wire communication for "Fan on" command. In this figure, it consists of two separate part circuit. One is for reading data from PC and these data would then be stored in a user file. In data communication, it is needed to transmit a start bit for transmitted bits in user file.

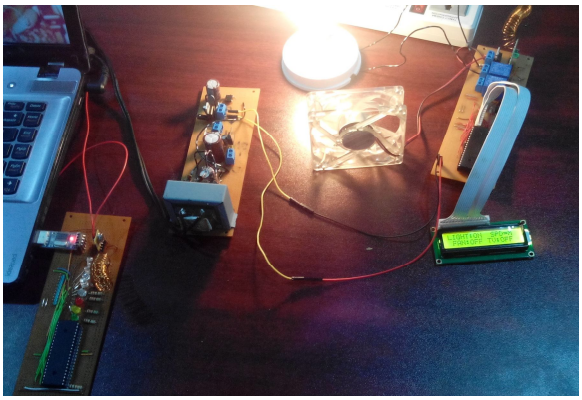

Fig. 6 Speech Command Tests for Electronic Home Appliances

After transmitting start bit, the data in user file will be serially transmitted to another PIC. This PIC receives the transmitted data and the output will go on if the receiving data is equal to the original data. If they are not equal, there is no output condition and the user must check until there is no error in program for the correct result.

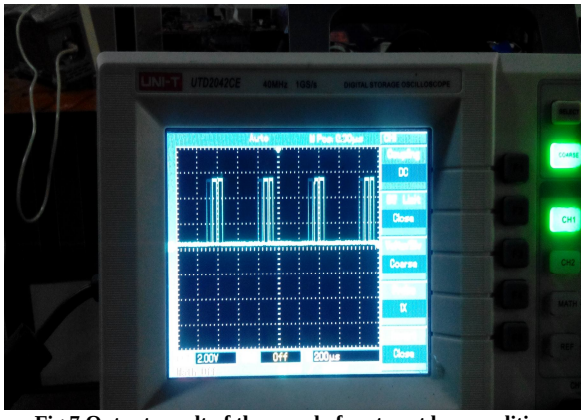

Fig.7 Output result of the speed of motor at low condition

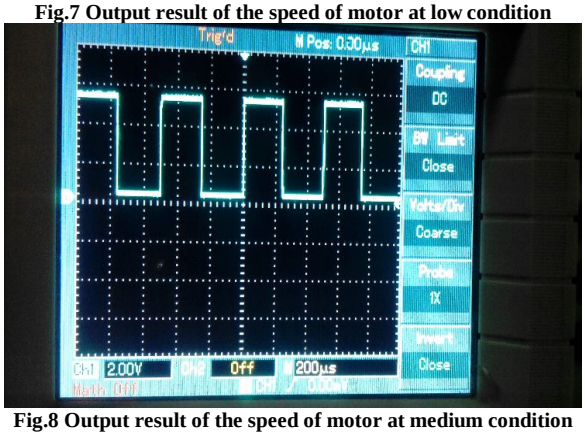

Fig.8 Output result of the speed of motor at medium condition

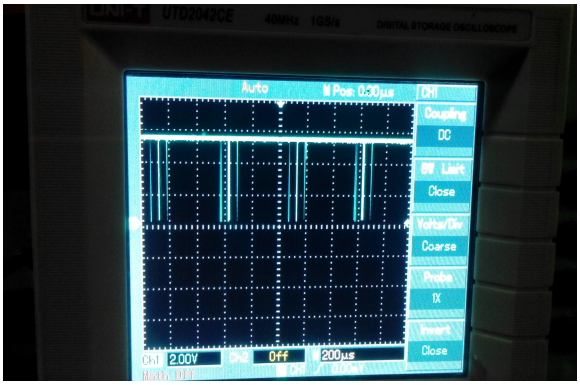

Fig.9 Output result of the speed of motor at high condition

This table includes command words, minimum distance between input vector and code book vector, maximum distance between input vector and code book vector, and execution time.

Command words	Distance between input vector and code book vector (Minimum)	Distance between input vector and code book vector (Maximum)	Execution time
TV on	0.0106	1.8075	0.44424
TV off	0.0873	2.5706	0.05861
Light on	0.0113	2.2317	0.05509
Light off	0.0960	1.5808	0.070341
Fan on	0.0144	1.6128	0.063073
Fan off	0.1764	3.7751	0.061763

Table 1: Distances between Input Vectors and Code Book Vectors in Real Time

CONCLUSION

Feature extraction and feature matching have two main parts: speech recognition and smart home appliances electronic control system. Speech recognition is implemented in MATLAB environment. In this process, it contains two main modules: feature extraction and feature matching. Mel Frequency Cepstral Coefficients (MFCC) is used for feature extraction. Vector Quantization (VQ) approach using clustering algorithm is applied for feature matching. In electrical home appliances control system, RF module is used to carry command signal from PC to microcontroller wirelessly. Microcontroller is connected to driver circuit for relay and motor. The input commands are recognized very well. The system is a good performance to control smart home appliances by spoken words. A wireless based home automation system which can be controlled through spoken commands is presented in this paper. In the proposed system, wireless component is added by Radio Frequency(RF)

module. An application for speech command processing is developed.

ACKNOWLEDGEMENTS

I would like to express a great debt of gratitude to Dr. Zaw Min Naing, Deputy Director General, Myanmar Science and Technology Research Department, for his patient guidance, supervision, suggestions and encouragement during a long period of this study. I would like especially thank to my supervisor, Dr. Maung Maung Latt, Rector, Department of Electronic Engineering, Technological University (Taungoo), my co-supervisor, Dr. Hla Myo Tun, Associate Professor and Head, and Dr. Su Su Yi Mon, Associate Professor, Department of Electronic Engineerng, Mandalay Technological University, for their useful guidance, patience and giving valuable ideas

REFERENCES

[1] Tychtl and Josef Psutka, "Speech Production Based on the Mel-Frequency Cepstral Coefficients"Mulgrew,

[2] Mishr and Suyash Agrawal, "Recognition Of Voice Using Mel Cepstral Coefficient & Vector Quantization" International Journal of Engineering Research and Applications (IJERA) Vol. 2, Issue 2,Mar-Apr 2012, pp.933-938

[3] Jie Liu, Jigui Sun, Shengsheng Wang, "Pattern Recognition: An overview", IJCSNS International Journal of Computer Science and Network Security, vol. 6, no. 6, June 2006.

[4] SeemaAsht and RajeshwarDass, "Pattern Recognition Techniques: A Review", International Journal of Computer Science and Telecommunications, vol. 3, issue 8, August 2012.

[5] Vinita Dutt, VikasChadhury, Imran Khan, "Different Approaches in Pattern Recognition",Computer Science and Engineering. 2011; 1(2): 32-35.T.C.

[6] M.A.Anusuya, "Speech Recognition by Machine," International Journal of Computer Science and Information security, Vol.6, No.3,
2009

[7] S.J.Arora and R.Singh, "Automatic Speech Recognition: A Review, "International Journal of Computer Applications, vol60-No.9,
December 2012

[8] S. M. Anamul Haque, S. M. Kamruzzaman and Md. Ashraful Islam, "A System for Smart-Home Control of Appliances Based on Timer and Speech Interaction", Proceedings of the 4th International Conference on Electrical Engineering & 2nd Annual Paper Meet, Vol.2, pp. 128-131, Jan 200

[9] Gnanasekar. A.K, Jayavelu.P, Nagarajan.V, "Speech Recognition Based Wireless Automation of Home Loads with Fault Identification", IEEE International conference on communications and signal processing (ICCSP), Vol. 3, pp.128-132, 2012.

★★★