DESIGN AUTOMATION AND CFD ANALYSIS OF DRAFT TUBE FOR HYDRO POWER PLANT

[1]GUNJANB. BHATT, [2]DHAVAL B. SHAH, [3]KAUSHIK M. PATEL

[1]Post Graduate Student, Mechanical Engg. Dept., Institute of Technology, Nirma University, India
[2]Assistant Professor, Mechanical Engg. Dept., Institute of Technology, Nirma University, India
[3]Professor, Mechanical Engg. Dept., Institute of Technology, Nirma University, India
Email: [1]gunjanbhatt23@gmail.com, [2]dbshah@nirmauni.ac.in, [3]kaushik.patel@nirmauni.ac.in

Abstract—The efficiency of a hydraulic reaction turbine is significantly affected by the performance of its draft tube. The shape and velocity distribution at the inlet are, in next turn, two main factors that affects the performance of the draft tube. Traditionally, the design of this component has been based on simplified analytic methods, experimental rules of thumb and model tests. In this paper, an attempt has been made for design automation of modeling of draft tube using Excel spreadsheet and Creo parametric software. In the last decade or two, the usage of computational fluid dynamics (CFD) has dramatically increased in the design process and will continue to grow due to is flexibility and cost-effectiveness. A CFD-based design search can further be aided with a robust and user-friendly optimization frame work theory and engineering. In this paper, the CFD analysis of draft tube has been performed and results for the same are compared with experimental reading and which are found within the limit.

Index Terms—CFD analysis, draft tube, pressure, stream line.

I. INTRODUCTION

The utilization of the hydraulic force in the domain of the electricity production has long been majority; it has started in antiquity with mills of water. The techniques permitting the exploitation of hydroelectric resources have benefited important progress during the twentieth century, in the scope of projects construction of the hydroelectric center of great speed. Through their size, their precision and their efficiency, the equipment of these hydroelectric center and especially hydraulics turbines arrived in first plan of realization. The hydraulic turbine is a mechanic dispositive which is used to transform potential energy and the kinetic energy of water, in mechanic energy. This will then be transformed into electric energy by an alternator. There exist two categories of hydraulics turbine. The turbine of action, which do not constitute a draft tube and function with the kinetic energy of water, and the turbine of reaction, which function with the pressure difference and the energy pressure.

With the increasing cost of energy and the high demand of green energy, hydraulic turbine of thin height of falls such as Francis and Kaplan turbines, are those targeted as being economically profitable. They are constituted of distributor, of volute, of runner and draft tube. The draft tube permits the recuperation of excess water kinetic energy coming from the runner and converts it into energy of static pressure.

Many studies on the draft tube flow have been done. Marjavaara [1], carried out a numerical study to show that the draft tube have an important rule on the global efficiency of a hydraulic turbine. According to Cervantes *et al.* [2], draft tubes are of great interest for turbines of thin height of fall like Kaplan turbines, since the draft tube efficiency increases with the decreasing of the height of fall. Anderson [3], had done an experimental study in the draft tube cone and demonstrated that for small height of fall and high output, loses in draft tube are considerably high and can go up to 50%. Labrecque [4], did a study on the conception of the axial turbine and demonstrated that the augmentation of the performance of hydraulic turbine pass by a good knowledge of the flow in the turbine.

II. DESIGNAUTOMATION OF DRAFT TUBE

As per the client's specification, dimensions for draft tube have been decided and 2D drawing for the same has been prepared as shown in Fig.1.

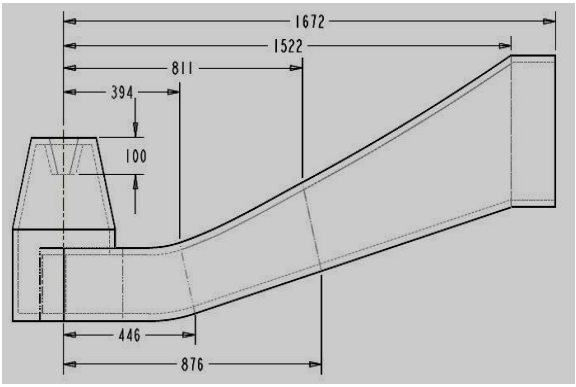

Fig 1: 2D Drawing of Draft Tube

Pro/Program is a powerful secondary generation tool to validate parametric design ofthe component. Pro/Program reflects all parameters and geometric data of the part in atext data form[7]. This data can be modified to new feature, deleting existing feature, suppress the feature and change the dimension of the feature. A proper user interface(API) can directly modify the Pro/Program and the part modal can be driven according to the user input in user interfacing.

Here Microsoft Excel and Creo are integrated by Excel Analysis tool which acts as an interfacing media. Excel analysis tool transfers the spreadsheet data to the Creo database. An excel spreadsheet which contains feature names and respective dimensions of thedraft tube has been prepared as shown in Fig 2.

	A	B	C
1			
2		FEATURE NAME	DIMENSION
3		CENTRE DIST_1	1600
4		CENTRE DIST_2	850
5		CENTRE DIST_3	420
6		FILLET_1	500
7			

Fig 2: Excel Spreadsheet

An Excel Analysis from Analysis Tab have been selected in Creo as shown in Fig 3 to transfer data from Excel Spreadsheet to Creo.

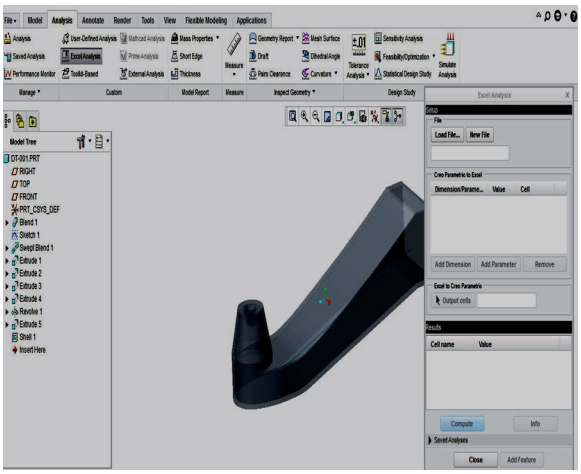

Fig 3: Excel Analysis in Creo

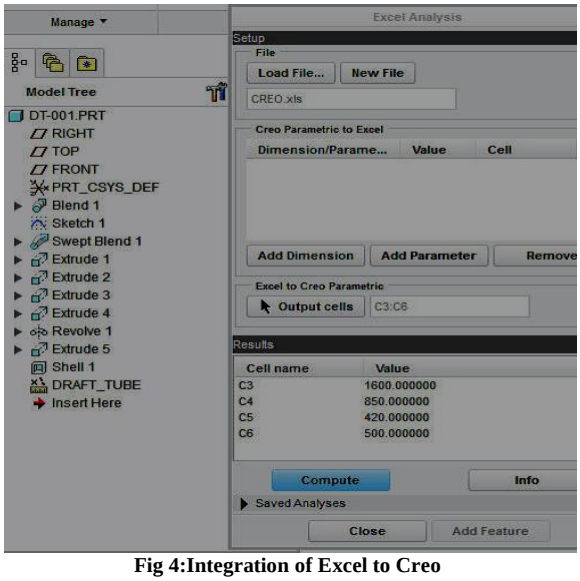

Fig 4:Integration of Excel to Creo

User can update the model just by modifying the sheet. This takes comparatively very less time to generate complex part models with respect to generating them individually. This technique is more suitable and simpler than any other technique like VB interfacing.

III. CFDANALYSIS

Here ANSYS workbench is used for CFD analysis of draft tube. For CFD analysis following step are performed. In step 1, creo model of draft tube has been converted in to STEP file and this step file has been imported in ANSYS. After importing model in ANSYS cavity model of draft tube has been created using fill command shown in fig 5.

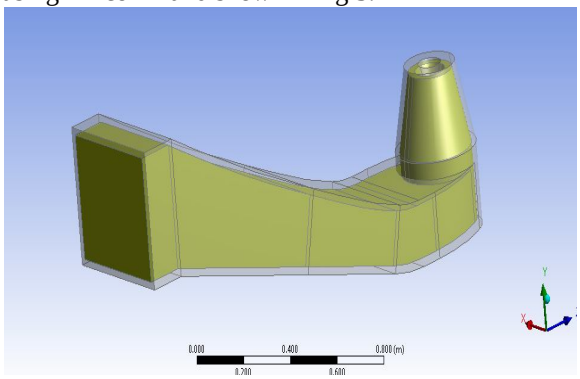

Fig 5: cavity model of draft tube

In step 2, the meshing of this draft tube model is done. In meshing CFD mesh type is selected and fine meshing is done by using ten node tetrahedral elements shown in fig 7. The reason for selecting this element is that is gives the good meshing on curvature parts. Meshing model of draft tube is shown in fig 6. In meshed model 12,330 nodes and 66,821 elements were created.

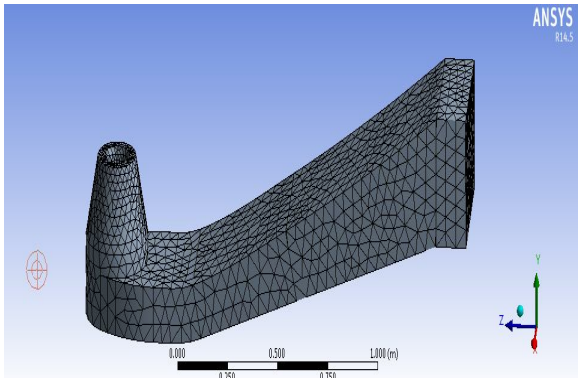

Fig. 6:Meshing of draft tube

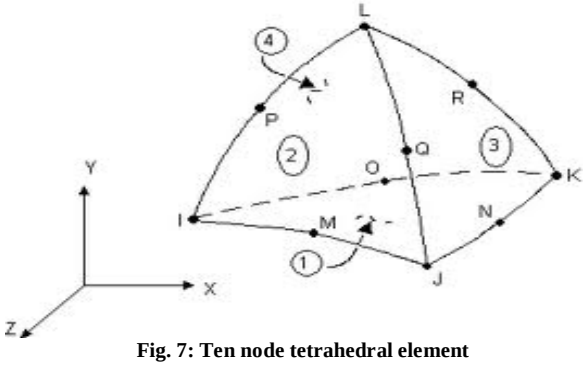

Fig. 7: Ten node tetrahedral element

The boundary condition for draft tube analysis have been applied. In boundary condition inlet mass flow rate is given 1000 kg/sec and outlet boundary condition is given 1atm as shown in fig 8 and fig 9.

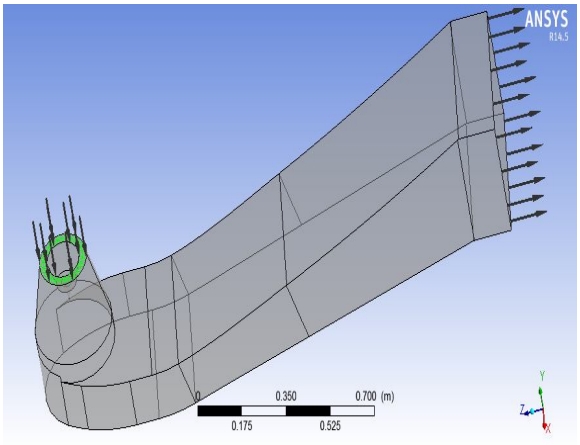

Fig 8: inlet boundary condition

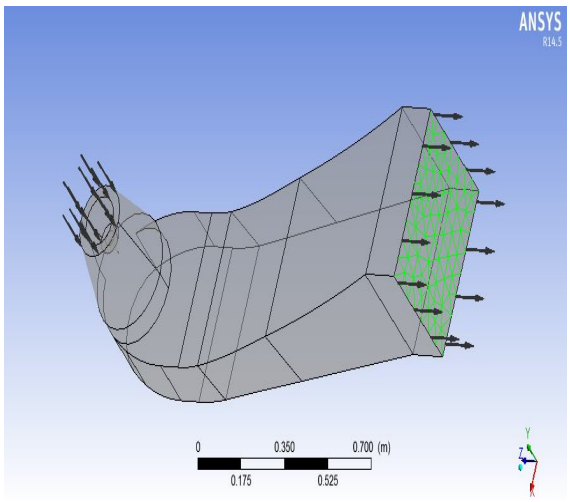

Fig 9: Outlet boundary condition

Now next step is run the CFX solver to get the result. After that last step is analyses and visualize the result in post processor. Here in post processor, the pressure and velocity distribution have been visualized and same are as shown in fig 10 and fig 11.

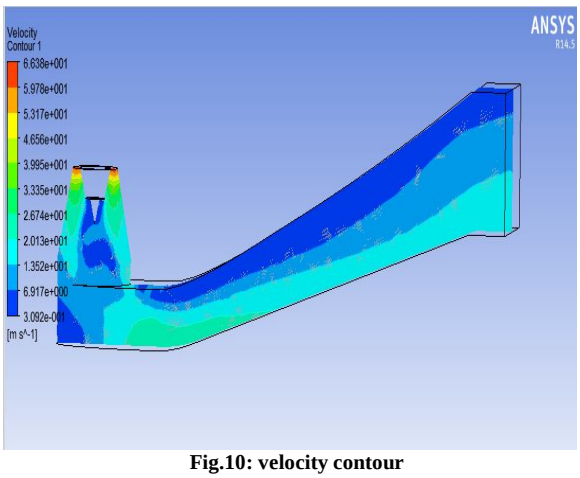

Fig.10: velocity contour

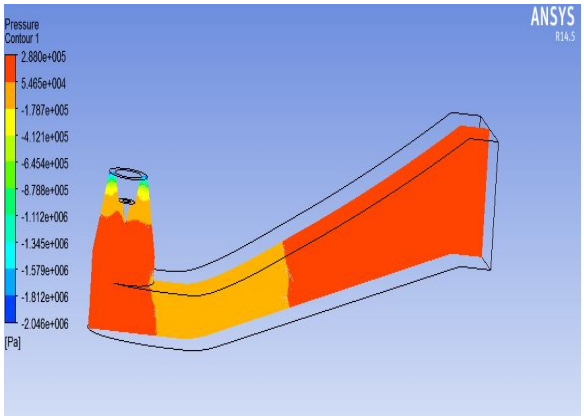

Fig. 11: Pressure contour

Fig 12 and fig 13 shows the pressure at inlet(-2.100× 10^5Pa) and pressure at outlet(1.071× 10^5 Pa)respectively. The streamline velocity contour has been shown in fig. 14.

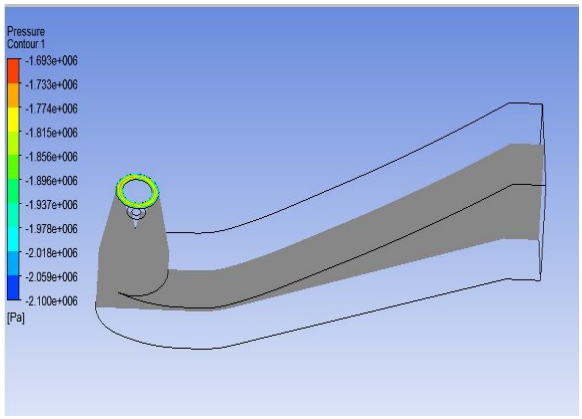

Fig 12 : Pressure at inlet

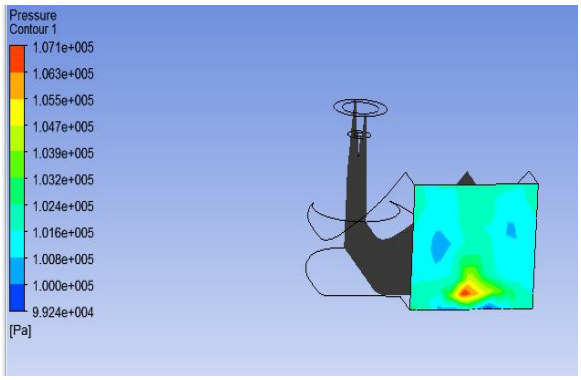

Fig 13: Pressure at outlet

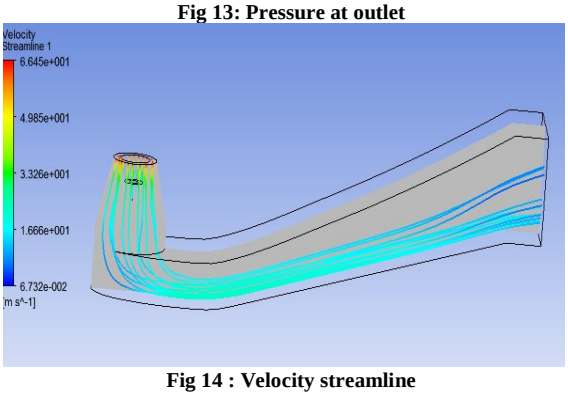

Fig 14 : Velocity streamline

IV. COMPARISON WITH EXPERIMENTAL READING

The pressure and velocity at inlet and outlet of draft tube has been measured by experimental procedure. The same results have been compared with ANSYS analysis results and % difference has been found as given in table 1, which shows both results are in good agreement with each other.

Table 1: comparison between ANSYS and practical reading

	INLET PRESSURE	OUTLET PRESSURE
ANSYS RESULT	-2.100×10^5Pa	1.071×10^5 Pa
PRACTICAL READING	-1.99×10^5Pa	1.12×10^5 Pa
% DIFFERENCE	5.23 %	4.38

CONCLUSION

ANSYS is very important software for analysis purpose and creo is very powerful software for making parametric modeling. So one can easily change 3D model dimension in less time for optimization purpose. The application of ANSYS is wide in engineering field. From above analysis it has been found that ANSYS result give the good agreement with experimental reading. By design automation one can reduce the time and cost of modeling and drafting. By analysis results one can predict almost nearer results of pressure and velocity profile without carrying higher cost experimental work.

REFERENCES

[1] Marjavaara B. D., (2006),"CFD driven optimization of hydraulic turbine draft tubes using surrogate models," Doctoral Thesis, Lulea University of Technology ISSN: 1402-1544, Sweden.

[2] Cervantes M., Andersson U., and Löfgren H. (2010), turbine-99,"unsteady simulations-validation, 25th IAHR Symposium on Hydraulic Machinery and Systems," Timisoara Romania.

[3] Anderson U., (2009), "Experimental study of sharp-heel Kaplan draft tube," Doctoral Thesis, Lulea University of Technology, ISBN: 978-91-86233-68-6, Sweden.

[4] Labrecque Y., (1993). Conception de turbines axiales, Projet de fin d'Etudes, Université de Laval, France.

[5] Siake A, Koueni-Toko C (2014), "Hydrodynamic Characterization of Draft Tube Flow of a Hydraulic Turbine",International Journal of Hydraulic Engineering.

[6] Mauri S., (2002),"Numerical simulation and flow analysis of an elbow diffuser", PhD. Thesis, École Polytechnique Fédérale de Lausanne, Communauté Helvétique.

[7] Ruchik D. Trivedi, Dhaval B. Shah, Kaushik M. Patel, (2013), "3D parametric modeling for product variants using case study on inner ring of spherical roller bearing", 3rd Nirma University International Conference on Engineering, Procedia Engineering 51, page 709-714.

[8] Sabareeshan K. and Willmert K., (2011), "Integration of Pro/Engineer with Visual C++ using Pro/Toolkit for design automation", NY: Advanced Modeling and Optimization (AMO), pp. 67-76.

★★★