FIBER OPTIC SENSOR FOR MEASURING LOAD OF VEHICLE ON HIGHWAY

[1]AYUSH KUMAR, [2]GURNEET SINGH MAKKED, [3]MADHUMITA MISHRA, [4]NEERAJ YADAV, [5]SONAM GUPTA

[1]Department of Electronics & Communication, IPS Academy, Indore, Madhya Pradesh, India
[2,4]Department of Electronics & Communication, IPS Academy, Indore, Madhya Pradesh, India
[3,5]Department of Electronics & Communication, Mandsaur Institute Of Technology, Mandsaur, Madhya Pradesh, India
E-mail: [1]mailayush.arya@gmail.com , [2]gurneetmit2010@gmail.com, , [3]madhumitamit2010@gmail.com
[4]neerajyadav16in@gmail.com , [5]sonam1482@gmail.com

Abstract- This paper reveals from the investigation on a special optical fiber as a load sensor for application in Weigh-in-Motion (WIM) systems to measure wheel loads of vehicles traveling at normal speed on highways. The fiber used has a unique design with two concentric light guiding regions of different effective optical path lengths, which has the potential to enable direct measurement of magnitudes as well as locations of forces acting at multiple points along a single fiber. The optical characteristic of the fiber for intended sensing purpose was first assessed by a simple fiber bending experiment and by correlating the bend radii with the output light signal intensities. The device with the optical fiber was tested under a universal loading machine and an actual vehicle wheel in the laboratory. The test results showed a good relationship between the magnitude of the applied load and the output optical signal changes. The results also showed a good correlation between the time delay between the inner and outer core light pulses and the distance of the applied load as measured from the output end of the fiber. This paper reports on the WIM installation and calibration efforts and investigates the preliminary results of data analysis of two types of piezoelectric WIM sensors in the period after sensors' calibration. An auto-calibration algorithm for the most effective piezoelectric WIM sensors will be provided in the future to supply calibration factors for Ontario's climate and for high speed, high volume roads, while collection of WIM data will provide an opportunity for investigating the load spectra impacts on the pavement designs. Fiber optics sensor technology offers different parameter measurements such as strain, pressure, temperature, current and many more things. For that different type of sensors are used and these sensors converts these parameters to optical parameters like light intensity or phase or polarization of light. These converted parameters are transmitted using an optical link over a long distance.

Keywords- Weight-in-Motion, Intrinsic & Extrinsic optical sensor ,point-to-point protocol, FTDM Fiber.

I. INTRODUCTION

An efficient and safe road network allows goods to reach the markets quickly, thus stimulating activity and ensuring trade competitiveness. Accurate measurement of static axle or wheel load has long been a major objective. Traditionally, these weights have been collected by pulling the vehicles off the roadway and weighing them at weigh stations while the vehicles are at rest. The static weighing of vehicles in highways has several disadvantages, including being time consuming, expensive, and dangerous on heavily travelled roads.

The concept of Weigh-In-Motion (WIM) was introduced more than fifty years ago. WIM is described as "the process of measuring the dynamic tire forces of a moving vehicle and estimating the corresponding tire loads of the static vehicle". The WIM systems mainly serve two very important functions:

1. Screening illegally overloaded trucks to prevent premature deterioration of the infrastructure.
2. Data collection for planning and management purposes.

The fiber optic sensor technologies offer interesting benefits when compared with traditional sensors. The main advantages are small size, electrically passive operation, electromagnetic immunity, flexibility, corrosion resistance, etc. Moreover, the technologies of fiber optic sensors become more and more efficient and reliable.

Fiber optic sensors can be used to perform local or distributed measurements with precision in a wide range of strain and temperature.

Optical fiber techniques proposed for WIM systems, include those based on light polarization and interferometry, bending loss, modulation of light intensity through an optical fiber having a single core and on the concept of bragg grating.

However, none of these have found widespread practical use so far.

II. FIBER OPTICS SENSOR PRINCIPLES

The general block diagram of fiber optics sensor is shown in figure 1.

It consists of optical source (LASER, Laser diode, LED, etc), optical fiber as transmission channel, sensing element, optical detector and end processed devices (oscilloscope, optical spectrum analyzer etc).

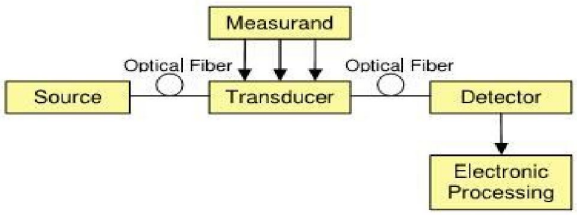

Fig. 1 Basic block diagram for optical fiber sensor system

Fiber optics sensors can be classified under three categories: the sensing location, the operating principle and the applications. Depending on location of sensor, a fiber sensor can be classified in intrinsic or extrinsic. Based on the operating principle and demodulation technique, a fiber optic sensor can be further divided into intensity, phase, frequency or polarization sensor.

III. CLASSIFICATION OF FIBER OPTICS SENSOR SYSTEMS

The above classification of fiber optics sensor system can be explained in following manner:

A. Based on Sensor location
i. Intrinsic
ii. Extrinsic
B. Based on operating Principle.
i. Based on intensity
ii. Based on phase
iii. Based on frequency
iv. Based on polarization

3.1.1 Intrinsic type optical sensor

In intrinsic sensing, the internal property of optical fiber itself converts the environmental changes into a modulation of light signal. This modulation of light signal may be in form of intensity, phase and frequency or may be polarization [4]. The following figure shows the basic concept of intrinsic optical sensor.

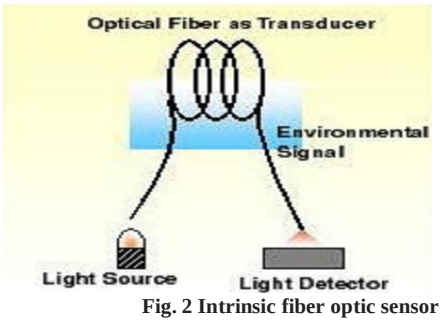

Fig. 2 Intrinsic fiber optic sensor

3.1.2 Extrinsic optical fiber sensor

In contrast to intrinsic sensing, in extrinsic sensing, the fiber may be used as information carriers that lead to a black box and that will generate a light signal depending on the information arrived at black box. This black box may be made of mirrors, gas, liquid cell, or many other mechanisms that will proceed to generate an optical signal . The following figure shows the block diagram explain function of external optical fiber sensing.

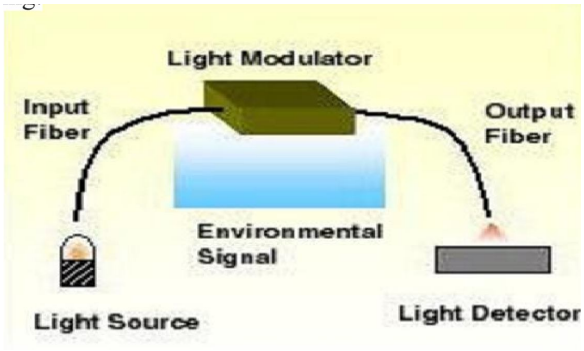

Fig. 3 Extrinsic Fiber Optic Sensor

3.2.1 Intensity Based Fiber Optic Sensor

When extrinsic sensor is used, generally it uses intensity based modulation. The figure 4 gives the idea about how a light intensity will be work as sensing parameter. This figure also explains how this arrangement makes the fiber to work as a vibration sensor. As there is a vibration, there will be a change in light injected from one end to another and this will make the intelligence for measuring vibration amplitude

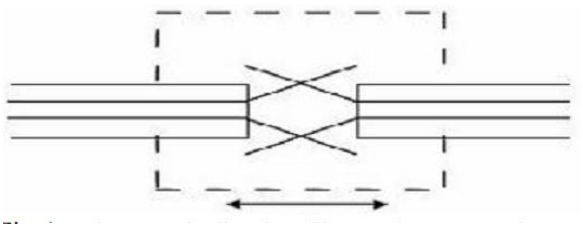

Fig.4 Closer and vibration fiber optics sensor depending on light intensity in later part

3.2.2 Wavelength Modulated Fiber Optic Sensors

Whenever there is change in measuring parameter, this kind of optical sensor will make change in their wavelength of light generation.

This can be determined by the light detector at receiver side and that will make measure from the change in wavelength to change in measured parameter. Fluorescence sensors, black body sensors and the Bragg grating sensors are of this type. For measuring quantities like temperature, viscosity, humidity, fluorescence based fiber sensors are used.

The most widely used wavelength based sensor is the Bragg grating sensor.

Fiber Bragg gratings are formed by constructing periodic changes in index of refraction in the core of single mode optical fiber [2].

This change in refractive index can be made by exposing the fiber core to an intense interference pattern of UV energy.

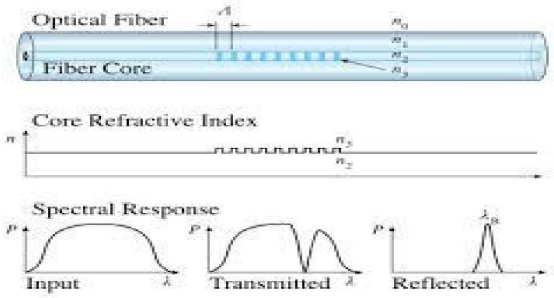

Fig. 5 Bragg Grating Response

3.2.3 Phase Modulated Fiber Optics Sensors

Phase modulated sensors are used to make change in emitted light regarding the change in information signal. And this information signal is noticed by such phase modulating optical sensor. This phase modulation is the detected by comparing the phase of light in the signal fiber to that in a reference fiber [2]. When a light beam is passed through interferometer, the light splits into two beams, where one beam is exposed to sensing environment undergoes a phase shift and the other is isolated from the sensing environment and is used for as a reference [4]. And once the beams are recombined, they interfere with each other.

Mach-Zender, Michelson, Fabry-Perot, Sagnac, polarimetric, and grating interferometer are most commonly used interferometers. Below figure shows Michelson

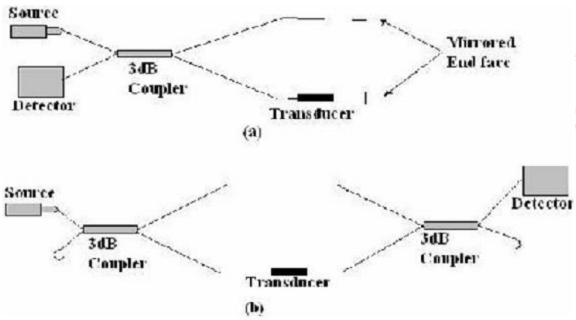

Fig.6 (a) Michelson (b) Mech-zehnder interferometer

IV. DESIGN OF WIM SYSTEM'S MEASURING CIRCUIT

In this paper, the method of capacitance-to- voltage (C-v) has been taken to measure capacitance.

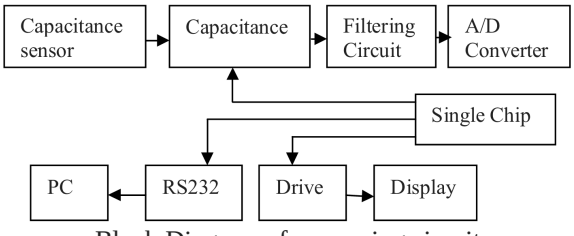

Block Diagram of measuring circuit

5. Description of Optical Fiber and Load/ Force Sensing Concept

Schematic diagrams of the cross section and the refractive index profile of the special fiber evaluated for load sensing in this study are shown in Figure7. The fiber structure is based on the Forward Time Division Multiplexing (FTDM) principle. The fiber comprises of the four concentric regions (Figure 7a): (i) a small single mode central (inner) core light guiding region (A), (ii) a cladding (B) around the single mode core, (iii) a second multimode graded index light-guiding region (C) around cladding, B, and finally (iv) an outer cladding region (D). When a train of light pulses of short duration is launched into the fiber core at one end, a lateral mechanical force applied at any point along the fiber will cause bending of the fiber and as a result deflect a fraction of the intensity of each of these interrogating light pulses from the inner core, A, to the graded index region, C (outer core).

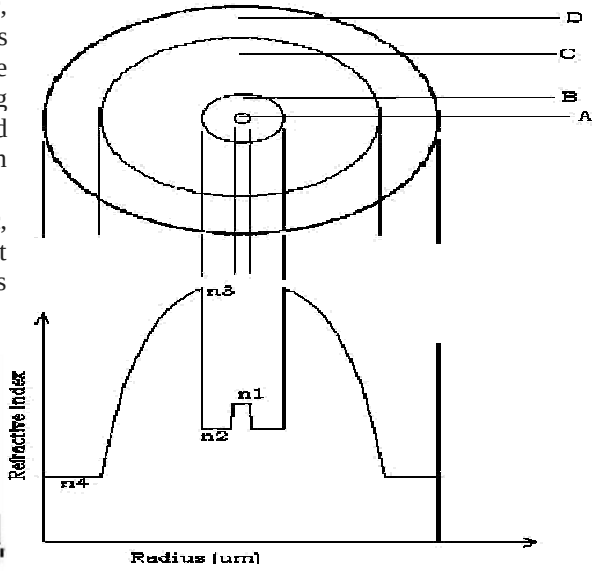

Fig.7 Dual core FTDM fiber

(a) cross-section, (b) schematic of representative refractive index Profile.

Because of the arrangement of the refractive index profile of the fiber (Figure 7b), the deflected light is captured within this graded index core, C, and transmitted to the other end of the fiber.

Since the refractive index of the outer light guiding region, C, is substantially greater than the refractive index of the inner light guiding region, A, the light pulses carried by the outer core will arrive at the fiber output end Δt seconds after the arrival of the undeflected light pulses transmitted by the central inner core. This time difference or interval is proportional to the distance of the location at which the force is applied measured from the output end of the fiber.

For practical purposes, this relation between the time delay ($\triangle t$) between the inner and outer light peaks and the distance of the bend or the applied load from the output end of the fiber can be written as:

$$t = (z/c)[(n_3)_{eff} - (n_1)_{eff}] = (z/c)(n_{31})_{ef}$$

where z is the distance from the output end of the fiber to the location where the force is applied; c is the speed of light in free space; and $(n_1)_{eff}$ and $(n_3)_{eff}$ are effective values of refractive indices, n_1 and n_2 of inner and outer core regions respectively as shown in Figure and $(n_{31})_{eff}$ is the difference between these effective refractive index values of the inner and outer light guiding regions.

Since some of the light escapes into the outer core, there is a loss in the intensity of the light traveling in the inner core. The magnitude of the force that bends the fiber can be determined from the changes in the intensities of the light signals traveling along the inner and/or outer cores.

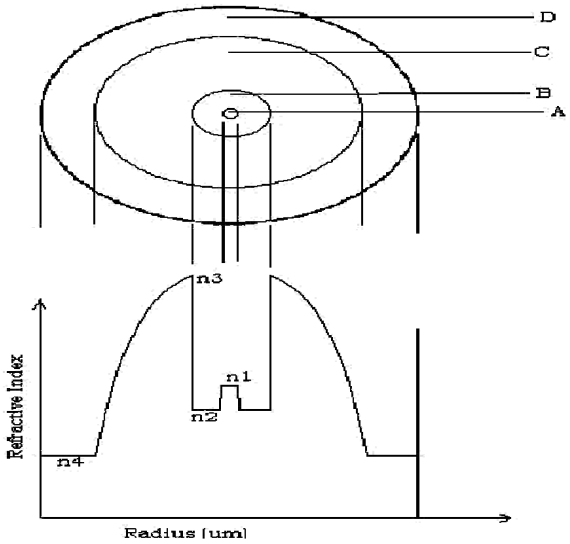

Fig.8 Input and output light signals through the fiber

In the paper, output signal from the sensor which is applied a constant force is shown in Fig. 7. Comparing Fig.8 with Fig.9, namely comparing the theory with the experimental strain curve, it can be seen that the agreement is good. Therefore Maxwell-Kelvin model is capable of describing mechanical response of the capacitive flexible weighing sensor presented in the paper.

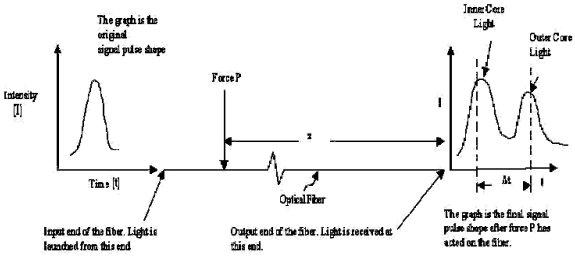

Fig.9 Strain curve for Maxwell-Kelvin model.

The strain is a function of time when the sensor is applied a constant stress. In order to decrease the effect of time, the weigh-in-motion system presented in the paper only records the instantaneous strain produced by the instantaneous constant stress, namely elastic strain ε_0 as the axle load such as the voltage of A point shown in Fig. 8 and 9.

The output signal from the sensor is shown in Fig.9 as the vehicle passes over the platform. Because the platform is short, the action time is instantaneous (in several hundred milliseconds) when vehicle passes over the platform at certain speed. The elastic strain of capacitive flexible sensor just happens and then the stress vanishes. Therefore the system measures the peak voltage of curve produced by the two axle of vehicle as the elastic strain, calculates the axle weights and sums them to obtain the gross weight.

paper.

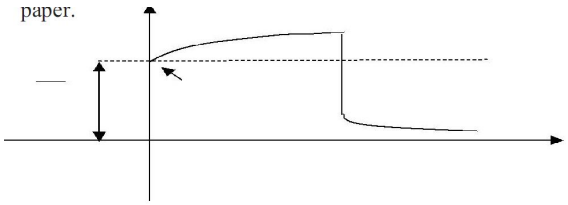

Fig.10 Response of the sensor after a force apply

VI. REMOTE WIM SYSTEM DESIGN AND INSTALLATION

6.1 Test Site Description

The layout of the weigh station is shown in Figure 11 When a truck enters the WIM zone, shown in Figure 11, the static weight of the truck is estimated and compared with a preset value to detect if it has an overloaded or unbalanced load. If it is an overloaded or unbalanced load, the traffic light at the end of WIM zone will lead the truck to a static scale operated by DPS personnel who will make a further inspection.

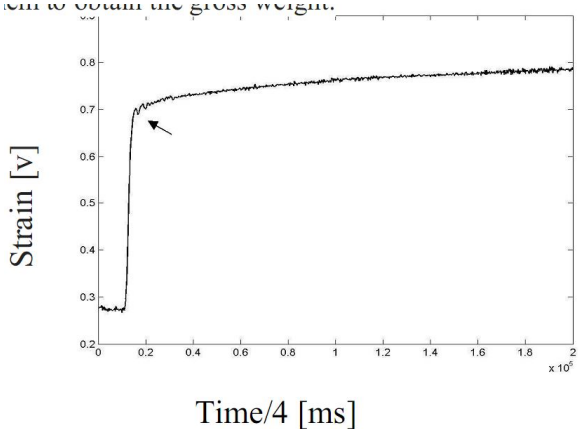

Fig.11 Weight Station Layout

Otherwise, the truck will re-enter the highway through a bypass lane. There is a parking lot in the weigh station used for further investigation of trucks that have to enter the static scale again in order to return to the highway.

The sensors under evaluation were embedded in the WIM zone pavement, a very smooth concrete pavement section upstream from the static scale of the weigh station and the bypass lane. The speed limit in the WIM zone is 15 MPH. When trucks enter the weigh station from the ramp, they usually need to reduce the speed rapidly which affects the WIM system's measurement accuracy, especially for the piezoelectric sensor. During this deceleration period, the wheel loads will change significantly due to load transfer between axles. However, since this location is within the weigh station, traffic can be controlled and static axle loads are easily obtained. The WIM section's pavement has a three-layer structure. The first layer is a concrete pavement about 12 inches thick. The second layer is a 4 inches thick hot-mix sub base and the third layer, lime treated subgrade, has a nominal thickness of 10 inches.

6.2 Remote WIM System Design

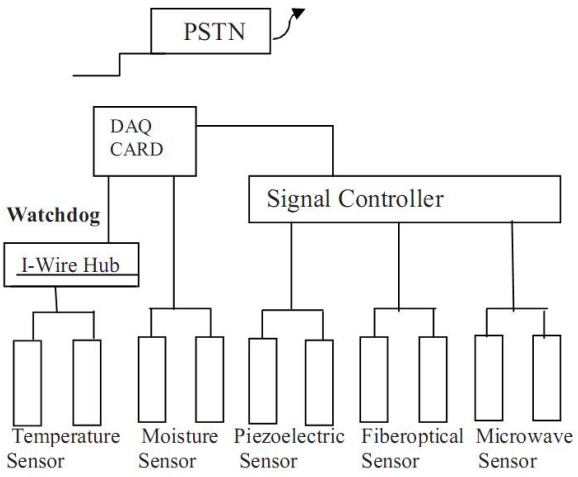

To evaluate various WIM sensors, including piezoelectric sensors, fiber optic sensors and microwave sensors, a remote accessible WIM system was designed. The remote functions of the system such as telnet, ftp, http, and Point-to-Point Protocol (PPP) services make it possible to do the real time system monitoring, software upgrade, and data logging.

6.3 Hardware Configuration

There are three kinds of WIM sensors included in the remote WIM system. They are piezoelectric sensors, fiber optic sensors, and microwave WIM sensors. In addition to these WIM sensors, other sensors such as one-wire temperature sensors and moisture sensors are also installed for monitoring the effects of temperature and moisture. The one-wire temperature sensors, DS1920 from Dallas Semiconductor, are connected by the one-wire network, and data is fed to the host computer through a one-wire hub. The data from the moisture sensors are obtained by the data acquisition card periodically. The signal conditioner is used to convert the signals of the sensors to the voltage acceptable by the data acquisition (DAQ) card. As for the piezoelectric sensors, the signal conditioners are no more than an amplifier. However, for the fiber optic sensor and microwave WIM sensors, the signal conditioners are circuits used to transmit, receive, and process the optic or microwave signal for acquiring corresponding voltage signals.

The fiber optic WIM sensor is an active sensor which has a measurement channel and a reference channel, and the signal conditioner receives not only the measured signal, but also the reference signal. Necessary processing must be conducted in the signal conditioner. The phase shift, frequency shift, or other parameters' variations are measured and used for weight determination. Normally, the signal conditioner will function as both an amplifier and signal translator. Once the signal is converted by the signal conditioner, we can use a DAQ card to acquire the signal. Today's general computer speeds are fully capable of handling the volume of data generated by the WIM station. Universal data acquisition equipment is used with the WIM system for its flexible and multi-functional advantages. The performance of the data acquisition is very important to the weight determination. Data acquisition equipment with sampling rates high enough to ensure the accuracy of the measurement is required. An external trigger function with the proper driver for the data acquisition equipment is expected. Since the host server of the WIM system is usually installed in the field under a harsher outdoor environment, a watchdog is very important for computer reset in some conditions like power failure and program malfunctions. In our system, one PCI version watchdog is installed in the server to monitor the system status, and a corresponding code is written to refresh the timer in the watchdog to keep it from overflowing. Once the timer inside the watchdog overflows for any reason, the server will be rebooted automatically. The value written into the timer can be set with dip switches on the watchdog card or controlled by a program. To access the remote functions, a broadband internet connection or phone line is necessary. Considering that the field installation of a WIM system is usually near a highway, a phone line is often available When the client host needs to connect with the server host, it dials the phone number assigned to the server host. Then, the server host will initialize a PPP service to setup the connection between the computers. Once the connection is established, other internet services can be initiated. The services provided include telnet, ftp, http, etc.

CONCLUSION

Weigh-in-motion is a method of weighing which can be applied in all situations where variable dynamic

loads occur. Many existing weighing sensors have been limited due to large volumes, hard to install, high cost and inconvenience to carry. Then, a remote WIM system was designed and used for data collection and analysis. The system has the ability to enable remote communication between server host and client host by a phone line and to monitor the WIM measurement. The sensors under study are installed in a WIM zone within a DPS weigh station where the corresponding static weight can also be achieved along with the WIM measurement The results verify that using the sensor to weigh in motion is feasible. In the paper, only the experiments under the slow speed conditions have been performed and the accuracy of WIM measured vehicle weights has not been affected obviously by speed. So in the future, the experiments under the high speed conditions could be performed and the effect of speed is to be studied. Other works such as temperature properties of the sensor, installation issues and effects of geometrical form of stressed part are to be studied. Furthermore, the measuring results should be transmitted and displayed by using wireless transmission technology with a view to designing really portable weighing equipment. The flexible sensor should be further improved on materials, measuring circuit and so on in order to achieve the higher precision.

ACKNOWLEDGMENT

I would like to thanks to our principal,HOD, staff of IPS Acedemy,Indore for their kind support and help in any situation.

REFERENCES

[1] Benekohal, Rahim F., El-Zohairy, Yoassry M., and Wang, Stanley, “Truck travel time around weigh stations: Effects of weigh in motion and automatic vehicle identification systems,” Transportation Research Record 1716, pp.135-143, 2000.

[2] Dahlin, C. 1992;, "A Proposed Method for Calibrating Weigh-In-Motion (WIM) Systems and for Monitoring that Calibration Over Time", Transportation Research Record, , no. 1364.

[3] Cheng, L.; Zhang, H.; Cao, X. Vehicle Weigh-in-motion Technology. Chinese Journal of Scientific Instrument 2006, 27, 943-948.

[4] Yannis, G.; Antoniou, C. Integration of Weigh-in-Motion Technologies in Road Infrastructure Management. ITE Journal 2005, 39-43.

★★★