NETWORK RECONFIGURATION FOR LOSS REDUCTION AND VOLTAGE STABILITY IMPROVEMENT OF 74-BUS RADIAL DISTRIBUTION SYSTEM USING PARTICLE SWARM OPTIMIZATION ALGORITHM

[1]SU MON MYINT, [2]SOE WIN NAING

[1]Ph.D Candidate, [2]Associate Professor
Electrical Power Engineering Department, Mandalay Technological University, Myanmar
E-mail: sumonmyint10@gmail.com, soewinnaing2011@gmail.com

Abstract- In Myanmar, a lot of power is remarkably dissipated in distribution system. There are two types of losses in power distribution system namely technical and non-technical loss. Accurate loss reduction and voltage stability improvement are the critical components for efficient electrical distribution power flow. There are several ways for line loss reduction and voltage profile improvement. Specifically, network reconfiguration method is employed for the proposed system. The power flow analysis of base case is done by using an advanced software known as ETAP 7.5 version. The inputs are given based on the real time data collected from 33/11kV substations under Yangon Electricity Supply Board (YESB). Network reconfiguration in distribution systems is performed by opening sectionalizing (normally closed) and closing tie (normally open) switches of the network. The most important benefit of network reconfiguration is loss reduction, voltage profile improvement and freeing up the power system capacity. The proposed method is tested on a 74-Bus distribution network. It is situated in Dagon Seikkan Township, Yangon Division. This network is chosen as a case study for this paper since it has a lot of industrial loads that cause reduction of system efficiency. Power distribution of the studied system is overhead AC radial distribution system. The distribution network reconfiguration was modelled by MATLAB tool. Particle swarm optimization method is applied to get the optimal switching scheme for network reconfiguration. Simulation results from load flow analysis have shown that the implementation of this project leads to a significant enhancement in voltage profile, reduction in the real power loss and percentage of real power loss. Finally, study results of system loss reduction and voltage stability enhancement with brief overview of approached model for proposed system are revealed in this paper.

Keywords- Loss Reduction, Network Reconfiguration, Particle Swarm Optimization, Voltage Stability Improvement

I. INTRODUCTION

The increase in power demand and high load density in the urban areas makes the operation of power systems complicated. To meet the load demand, the system is required to expand by increasing the substation capacity and the number of feeders. However, this may not be easily achieved due to various constraints. Therefore, to meet load demand for the substation, system loss minimization techniques are employed. After electric power is generated, it is sent through the transmission lines to the many distribution circuits that the utility operates. The purpose of the distribution system is to take that power from the transmission system and deliver it to the consumers to serve their needs. However, a significant portion of the power that a utility generates is lost in the distribution process.

These losses occur in numerous small components in the distribution system, such as transformers and distribution lines [1]. One of the major sources of losses in the distribution system is the power lines which connect the substation to the loads. Virtually all real power that is lost in the distribution system is due to copper losses. Since these losses are a function of the square of the current flow through the line, the losses in distribution lines are larger at high power levels than they are at lower levels. Network reconfiguration, capacitor placement and distributed generation are among different ways of decreasing losses. This condition leads to improve system voltage. Thus, these two facts are interconnected [2]. As distribution system of case study is radial distribution system, distribution feeder configuration is the best method. Distribution feeder reconfiguration is performed during the load transfer from heavy loaded feeder to lightly loaded feeder, load balancing and loss reduction. Feeder reconfiguration is a small part of distribution automation. After finding the statuses of different switches, if the result is sent to the switching control system then the feeder can be configured from a distant place.

There are two types of switches: normally open switches as tie-switch and normally close switches as sectionalizing switch. For the better planning of primary distribution system, the power distribution topology is required to change. Their aim was to obtain the minimal loss configuration [3]. Minimization of active power losses is one of the essential aims for any electrical distribution to improve system properties and meet the customer demand. As the value of loss depends on the active power, reactive power and voltage value of each node, total loss value can be reduced and percentage in power loss reduction can be minimized too. The voltage profile of the system can be improved and power factor of the substation will also be better [4].

II. PROBLEM FORMULATION OF POWER FLOW ANALYSIS

In the electrical power system losses, technical losses are more important than non-technical losses for designing the electrical power distribution system. These losses can still be grouped according to the segment of the electric system where it happens, can be subdivided into losses in the transmission system, substation power transformers, primary distribution system, secondary distribution system connection extensions. One of the main sources of losses is the copper losses in the distribution system in power overhead lines and cables. Since these losses are a function of current flows through the lines. Furthermore, unbalanced loading is another factor that can contribute to the line losses, where if one of the phases has more load than the other two, the losses will be larger than that if these phases are balanced. These losses can be reduced by network reconfiguration [3]. The data of Dagon Seikkan network is considered as a case study in this paper. There are many industrial loads, commercial loads, other departments and residential loads [5]. The losses of real power, reactive power and volt drop of each bus in case study are calculated by power flow analysis. Power flow analysis is important for planning future expansion of power systems as well as in determining the best operation of existing systems. The principal information obtained from the power flow analysis is the magnitude and phase angle of the voltage at each bus, and the real and reactive power flowing in each line. It is an analysis of the system's capability to adequately supply the connected load. The total system losses as well as individual line losses are tabulated [9]. For load flow calculation, Newton Raphson method is used in this paper. This is because the quadratic convergence for Newton Raphson is more superior to Gauss Seidel method. Besides that, it is less prone to divergence with ill-conditioned problem. In addition, Newton Raphson method is more suitable for large scale of power system because of it is more practical and efficient [8]. In addition, the active power losses can be calculated based on current formulation. The total power loss of feeders may then be determined by summing up the losses of all line sections of the feeder which is:

$$P_{Peak\ Loss} = \sum_{mn=1}^{k} |I_{mn}|^2 \times R_{mn} \quad (1)$$

$$I_{mn} = \frac{P_{mn} - Q_{mn}}{V_m} \quad (2)$$

Percentage change in the power loss reduction can be defined by:

$$\%\ \text{Power Loss} = \frac{P_{LB} - P_{LA}}{P_{LB}} \times 100 \quad (3)$$

where;

Imn = Current through in the branch (m, n)
Vm = Voltage at node m
Pmn = Real power through in the branch (m, n)
Rmn = Resistance in the branch (m, n)
Xmn = Reactance in the branch (m, n)
P_{LA} = Power loss after reconfiguration
Qmn = Reactive power through in the branch (m, n)
P_{LB} = Power loss before reconfiguration [4]

The power flows are computed by the following set of simplified equations:

Load Flow: F(x, u) = 0

$$P_i = \sum_{k=1}^{n} V_i V_k \left[G_{ik} \cos(\vartheta_{ik}) + B_{ik} \sin(\vartheta_{ik}) \right] \quad (4)$$

$$Q_i = \sum_{k=1}^{n} V_i V_k \left[G_{ik} \cos(\vartheta_{ik}) - B_{ik} \sin(\vartheta_{ik}) \right] \quad (5)$$

The general constraints in the optimization process are:

Power Injection Constraint: $P_{Sub} = P_D + P_{Loss}$

Bus Voltage Constrain: $V_{\min} \le V \le V_{\max}$ for all PQ buses

Radial Constraint:

The distribution system topology should be in series connection to minimize the complexity in calculating power flow [10].

III. NETWORK RECONFIGURATION IN ELECTRICAL DISTRIBUTION SYSTEM

System reconfiguration means restructuring the power lines which connect various buses in a power system. Restructuring of specific lines leads to alternate system configurations. System reconfiguration can be accomplished by placing line interconnection switches into network. Opening and closing a switch connects or disconnect a line to the existing network. Network reconfiguration in distribution systems is performed by opening sectionalizing (normally closed) and closing tie (normally open) switches of the network. These switching are performed in such a way that the radiality of the network is maintained and all the loads are energized. A normally open tie switch is closed to transfer a load from one feeder to another while an appropriate sectionalizing switch is opened to restore the radial structure. Branch exchange method which used to apply in this study starts with a feasible solution for distribution network operating in a radial configuration [11].

During applying reconfiguration technique, the tie switch has to be closed and on the other hand, the sectionalizing switch has to be opened in the loop created, which restores radial configuration. The switch pairs are chosen through heuristics and approximate formulas for the change in losses. Branch exchange process is repeatedly applied till no more loss reductions are available. A radial distribution

network can be represented by several loops. This is because, when it is connected, one tie-line can only make one loop, the number of loops is equal to the number of tie-lines [3]. The benefits of feeder reconfiguration include: (i) restoring power to any outage partitions of a feeder, (ii) relieving overloads on feeders by shifting the load in real time to adjacent feeders, and (iii) reducing resistive line losses. There is a voltage difference across the normally open tie-switch in the tie-line. Optimal reconfiguration involves the selection of the best set of branches to be opened, one each from each loop, for reducing resistive line losses, and reliving overloads on feeders by shifting the load to adjacent feeders. However, since there are many candidate switching combinations in the system, the feeder reconfiguration is a complicated problem [11].

IV. PARTICLE SWARM OPTIMIZATION

One of the global optimization techniques, particle swarm optimization (PSO) can be used for the valid switching combination creation for the problem formulation. Particle Swarm Optimization (PSO) is used in determining the best configuration that gives the maximum reduction of power loss. Newton Raphson method has been chosen as a power flow analysis in finding power loss value [12]. The initial power loss value (before reconfiguration) is set as original case study. By using 74-Bus system as a case study, the Particle Swarm Optimization (PSO) will determine the optimal reconfiguration for the system which indirectly reduces the loss. Furthermore, the network that used in this paper just limited to radial distribution network [5]. When the switching is performed, the network needs to be maintained in radial form. In order to get the best switching scheme in minimizing the losses, Particles Swarm Optimization (PSO) has been selected to be used in this radial distribution system. PSO is a swarm intelligence technique that inspired by social behavior of bird flocking or fish schooling. By taking a few assumptions about the optimization problem that will be solved, the PSO will update the searching solution until optimal value has been reached. PSO method is based on the research of bird and fish behavior has been invented by Doctor Kennedy and Eberhart in 1995. Based on the research, PSO is served as a powerful optimizer in any problem solving. First implementation of PSO is only covered for non-linear continuous optimization problem. In PSO, each particle is represented with two vectors which are position, P_i and velocity, V_i vectors. The size of vector is based on the problem dimension [12]. Some of modifications are made to propose PSO algorithm for network reconfiguration is explained below.

Steps of implementing PSO in network reconfiguration which are:

i. Initialize the input data which are bus data and line data for the distribution test system.

ii. Generate switch status at random and initialize the switch status with random position and velocities.

iii. Measure the power loss of each Pbest (opened switch) and store the switch number with the Gbest (the opened switch that will give minimum losses) value by running the load flow program.

iv. Update velocity and position of switch according to following equation for each opened switch.

Weight,

$$w^k = w_{\max} - \left(\frac{w_{\max} - w_{\min}}{iter_{\max}} \right) \times (iter_{current}) \qquad (6)$$

New velocity,

$$v_{new} = w^k (v_{old}) + c_1 r_1 (P_{best} - x_1) + c_2 r_2 (G_{best} - x_1) \qquad (7)$$

New position,

$$x_{new} = old\ position, x_{old} - velocity, \Delta x \qquad (8)$$

where;

Wmax = Maximum weight
Wmin = Minimum weight
$iter_{current}$ = Current iteration
$iter_{max}$ = Maximum iteration
v_{old} = Current velocity
c_1, c_2 = Acceleration coefficient
Pbest = Switch's best position found at the current iteration
Gbest = Best known position found any switch at the current iteration
r_1, r_2 = Random variable between 0 and 1
x_1 = Switch's current position

v. Compare the current Pbest with previous Pbest and select the best Pbest as local best. Then, compare the Pbest with Gbest to find the real Gbest.

vi. If the iteration has reached the maximum, then stop the iteration and choose the Gbest as best fitness. If not, go to step 2.

The weight factor is used in PSO for manipulating the stability of the function with the larger setting of it, will give a more accurate result. Besides that, the best weight factor is able to help in minimizing the number of iterations in searching the best position that can give minimum losses. Acceleration coefficient also helps in maintaining the stability of PSO. The velocity of the switch is not necessary to be in integer value because it will be used only in updating the switch's position.

The position of switch refers to the number of tie line to be closed. Thus, the value of the position should be integer and positive to ensure the range to perform as a switch is acceptable and logic. When the tie line is closed, this will create a loop in the network. Therefore, to maintain in a radial network, the sectionalizing switches must be opened. The sectionalizing switches that need to be opened should be given minimum losses [13].

Next flow chart shown explains the process of PSO for network reconfiguration to give clear clarification in Fig.1.

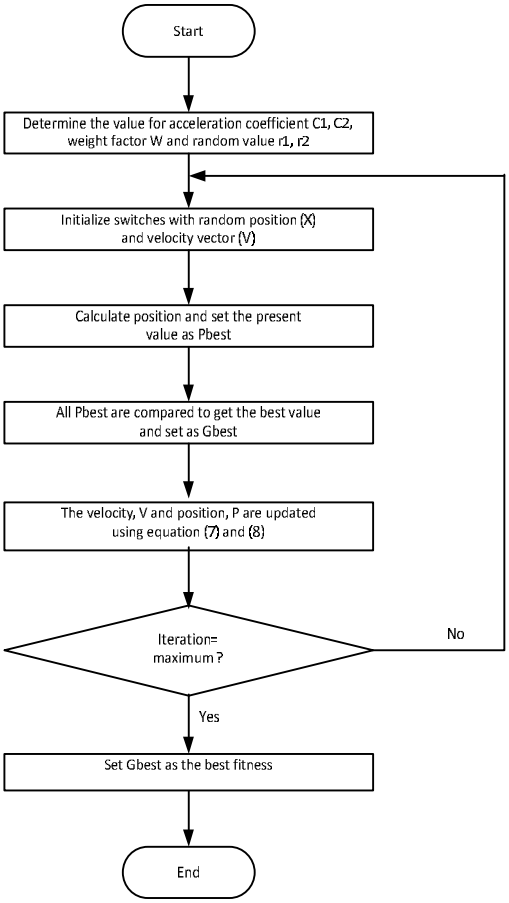

Fig. 1 Flow Chart of Particle Swarm Optimization

In general the PSO steps can be summaries as follows:

i. Initialization bus data and line data
ii. Calculate power loss
iii. Find Pbest and Gbest for all switches
iv. Find new velocity and new position
v. Repeat step (ii) [13]

V. OVERVIEW OF 74-BUS RADIAL DISTRIBUTION NETWORK

The system under study is one of the 11kV distribution networks under Yangon Electricity Supply Board (YESB). The distribution networks are located in Dagon Seikkan Township in Yangon. Incoming line is 33kV and outgoing line is 11kV. Step down power transformer is used to distribute power and its rating is 10MVA. The distribution voltage of the system under study is 11kV. Installed capacities for cool store, industrial zone 1 and Yuzana 2 are 1900 kVA, 21215 kVA and 7130 kVA.

But some distribution transformers are not full load condition. Load of this system receives a voltage of 400V and type of load is lump load. Conductor size for 33kV is 120mm^2 and 11kV is 95mm^2. ACSR conductor is used for incoming and outgoing feeders. The distribution system is radial distribution system. The single line diagram of Dagon Seikkan Township is shown in Fig. 2 [5].

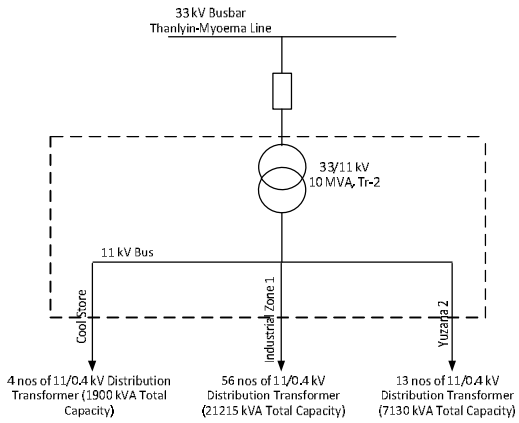

Fig. 2 Single Line Diagram of 10MVA Power Transformer [5]

VI. ETAP MODEL IN POWER FLOW ANALYSIS

ETAP stands for Electrical Transient Analyzer Program. It can quickly and easily build 3-phase and 1-phase AC and DC network one-line diagrams with unlimited buses and elements. Single line diagram of case study, ratings of power transformers and distribution transformers and actual ratings of line parameters are needed to simulate ETAP software. It can perform numerical calculation of large integrated power system with fabulous speed. This software currently utilizes for the load flow solutions of the base case. It is easy to understand program layout, along with the simplicity of data entry and it can reduce engineering man hours. This leads to easily manage large system with hundreds of feeders [6]. ETAP's libraries verified and validated based on the manufactured published data, and applicable standards including ANSI and IEC. ETAP software is used to determine the real power, reactive power, current and voltage for 74-Bus distribution network by running the load flow. This allow the proper layout for the distribution feeders in township to be made in the form of single line diagram which enables a better understanding the loss calculation of the location in a more precise way. Power flow solutions of 74-Bus radial distribution system before loss reduction are modeled by ETAP software. Also, Newton Raphson load flow method is used for power flow solutions in ETAP. It generates output reports based upon the recorded data obtained from the grid. Current flowing in every branch, line losses, bus voltage, power factor and percentage in volt drop on the feeder of the existing system can be calculated by this software. It generates load flow reports for the existing system. ETAP based upon practical data and complete off-line monitoring is also made to predict the actual effects of loads on the entire power system. Thus, ETAP power management software aids the need of the engineers for better, smart and flexible designs under considerations. So ETAP software is one of the efficient software to analyze the very complex power systems [7]. ETAP software is applied for before

network reconfiguration. Line parameters and load flow data from ETAP' results are inserted in Matlab program for network reconfiguration of 74-Bus radial distribution system to run the load flow program. Particle swarm optimization (PSO) is used as an intelligent technique or optimization tool to give an optimal network configuration for the proposed system. Matlab software is carried out for load flow solutions of case study after network reconfiguration.

VII. SIMULATION RESULTS AND DISCUSSION

The proposed method has been tested on 74-Bus radial distribution system to ascertain its effectiveness. For that system, all tie and sectionalizing switches which belong to any loop are considered as candidate switches for reconfiguration problem. The 74-Bus, 11kV system consists of three main feeders and five tie lines. The schematic diagram of the system is shown in Fig. 3 and shows the connection of 74-Bus system with tie lines.

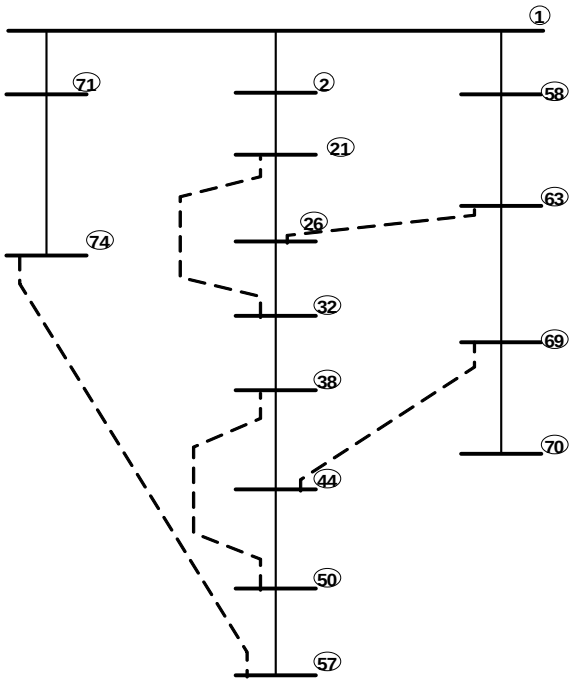

Fig. 3 74-Bus Radial Distribution System

Five tie lines before network reconfiguration are 74, 75, 76, 77, and 78 because of long length and overloaded lines. For this case, the initial real power loss is 169.7686.6 kW and minimum voltage is 0.94489 pu. To reconfigure this network, Particle Swarm Optimization (PSO) algorithm is used to find the optimal switching configuration and loss. After network reconfiguration, five tie lines are 69, 74, 75, 76, and 77 for the proposed system. Real power loss is reduced to 137.5516 kW and minimum voltage is improved to 0.9632 pu. The percentage reduction in the real power loss is equal to 18.977%. The values of the voltage and real power loss for before and after reconfiguration of the test system are depicted in Table I.

Table I
Results for 74-Bus Radial Distribution System

	Before Reconfiguration	After Reconfiguration
Tie Switches	74 75 76 77 78	69 74 75 76 77
Power Loss (kW)	169.7686	137.5516
Power Loss Reduction (%)	-	18.977
Minimum Voltage (pu)	0.94489	0.9632

Comparisons of bus voltage improvement at distribution feeders before and after reconfiguration simulating by Matlab program is explained in Fig. 4. In this figure, red line represents before reconfiguration state and blue line is after reconfiguration condition. Before reconfiguration, some operating bus voltages between node 30 and node 58 are out of voltage regulation limits because they are lower than 95%. However, operating bus voltages of these nodes are improved to within voltage regulation limits $(\pm 5\%)$ after network reconfiguration of an existing system.

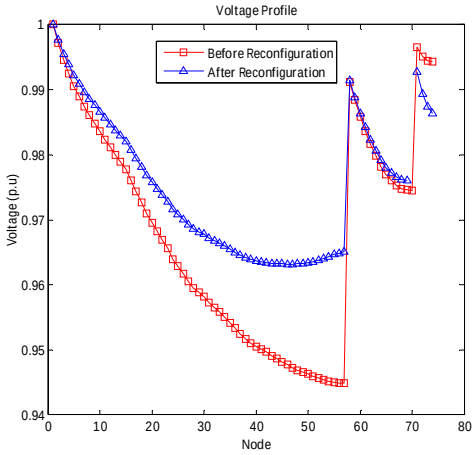

Fig. 4 Comparison of Bus Voltage Improvement Before and After Reconfiguration

CONCLUSION

In this paper, the reconfiguration of distribution network under 10 MVA, 33/11 kV transformer is presented. It has three radial outgoing feeders. The base voltage is 11kV and 74 buses are studied in detail for reconfiguration. After reconfiguration process, voltage regulation and efficiency of distribution system are better since operating voltage exists between 95% and 105% and line losses also reduce. The simulation results of the system are shown in Table I and Fig. 4. The values of minimum voltage,

real power loss and percentage of real power loss reduction are described. The power losses and voltage profiles were studied and different reduction techniques were described in this paper. ETAP software is obviously giving much quicker results for load flow solutions of base case than the other approaches as it is less computational time. Matlab tool is applied for the network reconfiguration to achieve an optimal switching scheme by using Particle Swarm Optimization (PSO) algorithm. According to simulation results, network reconfiguration is the most effective way for the proposed system. From these results, total real power loss reduced from 169.7686 kW before network reconfiguration state to 137.5516 kW after network reconfiguration state. Thus, distribution system loss is reduced about 18.977%. Also, all operating bus voltages are within stability limits $(\pm 5\%)$ after network reconfiguration condition.

Line parameters and load data used in Matlab program are shown in Table II and Table III.

ACKNOWLEDGMENT

The author wishes to express her special thanks to her parents for their supports and encouragement to attain her destination without any trouble throughout her life. The author is deeply grateful to supervisor, Dr. Soe Win Naing, Associate Professor, Department of Electrical Power Engineering, Mandalay Technological University, for his encouragement, patience and valuable advice during a long period of her paper. The author would like to express special thanks to Dr. Yan Aung Oo, Associate Professor, Department of Electrical Power Engineering, Mandalay Technological University for his accomplished guidance, his willingness to share ideas and valuable suggestion in preparing this paper. The author is very thankful to U Bo Bo Win, Executive Engineer (Dagon Seikkan Substation) from Ministry of Electric Power Enterprise (MEPE) for providing the required data and information.

Table II
Load Data for 74-Bus System

Bus N	P (MV	Q (Mva	Bus N	P (MV	Q (Mva
1	0	0	38	0.217	0.146
2	0.193	0.130	39	0.037	0.025
3	0.001	0.001	40	0.114	0.077
4	0.003	0.002	41	0.012	0.008
5	0.108	0.073	42	0.055	0.037
6	0.005	0.003	43	0.072	0.048
7	0.018	0.012	44	0.040	0.027
8	0.016	0.011	45	0.004	0.003
9	0.076	0.051	46	0.041	0.027
10	0.052	0.035	47	0.042	0.028
11	0.046	0.031	48	0.049	0.033
12	0.123	0.083	49	0.043	0.029
13	0.046	0.031	50	0.061	0.041
14	0.007	0.004	51	0.046	0.031
15	0.070	0.047	52	0.010	0.007
16	0.070	0.047	53	0.009	0.006
17	0.004	0.003	54	0.065	0.044
18	0.049	0.033	55	0.045	0.030
19	0.057	0.038	56	0.076	0.051
20	0.118	0.079	57	0.071	0.048
21	0.019	0.013	58	0.394	0.265
22	0.014	0.010	59	0.234	0.157
23	0.008	0.006	60	0.227	0.153
24	0.210	0.141	61	0.225	0.151
25	0.136	0.092	62	0.192	0.129
26	0.189	0.127	63	0.118	0.079
27	0.016	0.010	64	0.418	0.281
28	0.074	0.049	65	0.234	0.157
29	0.117	0.079	66	0.221	0.148
30	0.006	0.004	67	0.198	0.133
31	0.125	0.084	68	0.249	0.167
32	0.017	0.011	69	0.113	0.076
33	0.004	0.003	70	0.096	0.064
34	0.019	0.013	71	0.091	0.061
35	0.031	0.021	72	0.116	0.078
36	0.040	0.027	73	0.168	0.113
37	0.011	0.007	74	0.116	0.078

Table III
Branch Data for 74-Bus System

From Bus	To Bus	R (Ω)	X (Ω)	From Bus	To Bus	R (Ω)	X (Ω)
1	2	0.0578	0.0438	38	39	0.0431	0.0327
2	3	0.0564	0.0428	39	40	0.0431	0.0327
3	4	0.0431	0.0327	40	41	0.0360	0.0273
4	5	0.0431	0.0327	41	42	0.0360	0.0273
5	6	0.0360	0.0273	42	43	0.0578	0.0438
6	7	0.0360	0.0273	43	44	0.0465	0.0352
7	8	0.0289	0.0219	44	45	0.0507	0.0384
8	9	0.0289	0.0219	45	46	0.0536	0.0406
9	10	0.0289	0.0219	46	47	0.0549	0.0417
10	11	0.0289	0.0219	47	48	0.0564	0.0428
11	12	0.0289	0.0219	48	49	0.0422	0.0319
12	13	0.0289	0.0219	49	50	0.0431	0.0327
13	14	0.0289	0.0219	50	51	0.0649	0.0492
14	15	0.0289	0.0219	51	52	0.0621	0.0471

15	16	0.0465	0.0352	52	53	0.0635	0.0481
16	17	0.0465	0.0352	53	54	0.0635	0.0481
17	18	0.0465	0.0352	54	55	0.0635	0.0481
18	19	0.0465	0.0352	55	56	0.0318	0.0241
19	20	0.0403	0.0305	56	57	0.0318	0.0241
20	21	0.0403	0.0305	1	58	0.2010	0.1523
21	22	0.0403	0.0305	58	59	0.0721	0.0546
22	23	0.0403	0.0305	59	60	0.0721	0.0546
23	24	0.0507	0.0384	60	61	0.0721	0.0546
24	25	0.0360	0.0273	61	62	0.0721	0.0546
25	26	0.0450	0.0341	62	63	0.0721	0.0546
26	27	0.0450	0.0341	63	64	0.0721	0.0546
27	28	0.0450	0.0341	64	65	0.0721	0.0546
28	29	0.0289	0.0219	65	66	0.0721	0.0546
29	30	0.0289	0.0219	66	67	0.0721	0.0546
30	31	0.0431	0.0327	67	68	0.0721	0.0546
31	32	0.0403	0.0305	68	69	0.0721	0.0546
32	33	0.0360	0.0273	69	70	0.0721	0.0546
33	34	0.0431	0.0327	1	71	0.4741	0.3593
34	35	0.0465	0.0352	71	72	0.2371	0.1797
35	36	0.0465	0.0352	72	73	0.1659	0.1258
36	37	0.0484	0.0366	73	74	0.1071	0.0812
37	38	0.0484	0.0366				

REFERENCES

[1] New York, 1997 Willis, H.L., "Power distribution planning reference book," Marcel Dekker, New York, 1997.

[2] Benedict, E.; Collins, T.; Gotham, D.; Hoffman, S.; Karipides, D.; Pekarek, S.; and Ramabhadran, R.; "Losses in electric power systems," (1992).

[3] M. E. Baran, Felix F. Wu, "Network Reconfiguration in Distribution System for Loss Reduction and Load Balancing." IEEE Transactions on Power Delivery, 4:2, 1989.

[4] C.M.P dos Sanyos, "Determination of electrical power losses in distribution system" IEEE PES Transmission and Distribution Conference and Exposition Latin America, Venezuela, pp. 1-5, 2006.

[5] Dagon Seikkan Substation, 2014. A department report. Dagon Seikkan Township, Yangon.

[6] Electrical Transient AnalyzerProgran (ETAP),www.etap.com

[7] Keith Brown, Farrokh Shokooh, Herminio Abcede and Gary "Donner interactive simulation of power system: "Etap techniques and applications", IEEE Flour Daniel Inc. Irvine, ISBN: 0-87942-553-9, Page(s): 1930-1941 vol.2, Seattle, WA, USA, 7-12 Oct 1990.

[8] Power Flow Study, http://en.wikipedia.org/wiki/Power-flow-study# Load-flow

[9] Grainger, J.; Stevenson, W., "Power system analysis" New York: McGraw–Hill. ISBN 0-07-061293-5, 1994.

[10] X. Yang, M. S. Choi, I. H. Lim, S. J. Lee, "Load flow analysis for distribution automation system based on distributed load modeling." Journal of Electrical Engineering & Technology, 2:3, pp. 329-334, 2007.

[11] H. Rudnick, I. Harnisch, R. Sanhueza, "Reconfiguration of electric distribution systems." Revista Facultad De Ingenieria, U.T.A. (Chile), 1997.

[12] M. Dorigo et al., "Particles Swarm Optimization (PSO)," Scholarpedia, 3 (11): 1486, 2008.

[13] Noor Atiqa Edayu Binti Abd Ghani, "Network reconfiguration in distribution power system based on peak load condition," June 2014.

★★★