ENHANCEMENT OF SYSTEM PERFORMANCE USING UPFC

[1]ROOPA. R, [2]K.SHANMUKHA SUNDAR

[1]M'tech (Power Electronics), [2]Professor and Head, Department of Electrical and Electronics, Dayananda Sagar College of Engineering, Bangalore-78, Karnataka.
E-mail: roopapradeep.r@gmail.com

Abstract- This project describes the modelling and simulation of IEEE 6 bus and IEEE 14 bus system employing Unified Power Flow Controller (UPFC). Simulink models are developed for IEEE 6 bus system and IEEE 14 bus system with and without UPFC. The simulation has shown that the proposed compensation model worked well and capable to improve the quality of injected voltages, it is able to control both the transmitted real power and, independently, the reactive power flows at the sending and the receiving end of the transmission lines in 6 Bus and 14 Bus network and reduce the transmission line losses of 6 and 14 Buses respectively. The proposed conditioner presents both 6 bus and 14 bus model with and without UPFC simulated using MATLAB/SIMULINK. However, due to high capital investment, it is necessary to locate the device at optimal location in the power system. In this project, a suitable approach has been used based on the sensitivity analysis on UPFC device control parameters with respect to reduction in the transmission line losses and total system real power loss to enhance the power system security. The effectiveness of the method has been tested on IEEE 14- bus system.

Keywords- FACTS, UPFC, matlab simulink, ac transmission system.

I. INTRODUCTION

Today's power system is highly complex and requires careful design of new devices taking into consideration of already existing equipments. Now-a day, number of private generating units is getting commissioned due to power generation policy and open access to transfer power. But, due to variety of environmental and regulatory concern, the expansion of electric power transmission facilities is restricted. Power Transmission and Generation utility would be benefited if they could increase line power capability.

It is well known that the power flow through transmission line is a function of line impedance, magnitude and phase angle of bus voltage. If these parameters can be controlled, the power flow through the transmission line can be controlled in a predetermined manner. Controlling power flow in modern power systems can be made more flexible by the use of recent developments in power electronics and computing control technology. The Unified Power Flow Controller (UPFC) is a Flexible AC transmission system (FACTS) device that can control all the three system variables namely line reactance, magnitude and phase angle difference of voltage across the line. In this paper UPFC is treated to operate in closed loop form and control parameters of UPFC are derived to meet the required power flow along the line. The objective of the project is to achieve significant improvements in operating parameters of power systems such as, voltage profile, control of real and reactive power, and reduction in transmission line losses by adding UPFC in IEEE 6 bus and IEEE 14 bus system. Variable resistance and reactance model of UPFC is adapted into the UPFC module built in Matlab/Simulink software. Finally the simulation results have been presented to indicate the improvement in the performance of the UPFC to control voltage, active and reactive power in transmission system.

II. UNIFIED POWER FLOW CONTROLLER.

A. Characteristics of UPFC.

Line outage, congestion, cascading line tripping, power system stability loss are the major issues where capability and utilization of FACTS are noticed. Representative of the last generation of FACTS devices is the Unified Power Flow Controller (UPFC). The UPFC is a device which can control simultaneously all three parameters of line power flow (line impedance, voltage and phase angle). Such "new" FACTS device combines together the features of two "old" FACTS devices: the Static Synchronous Compensator (STATCOM) and the Static Synchronous Series Compensator (SSSC). As the need for flexible and fast power flow controllers, such as the UPFC, is expected to grow in the future due to the changes in the electricity markets, there is a corresponding need for reliable and realistic models of these controllers to investigate the impact of them on the performance of the power system. In this article emphasis is laid to project the use of UPFC in transmission link to reduce the transmission line losses and to improve the voltage profile of the system using MATLAB SIMULINK.

B. Operation of UPFC

The basic components of the UPFC are two voltage source inverters (VSIs) sharing a common dc storage capacitor, and connected to the power system through coupling transformers. One VSI is connected to in shunt to the transmission system via a shunt transformer, while the other one is connected in series

through a series transformer. A basic UPFC functional scheme is shown in figure 1

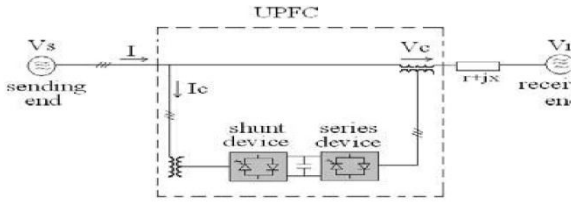

Fig.1 :UPFC Link in Transmission Line

The series inverter is controlled to inject a symmetrical three phase voltage system (Vc), of controllable magnitude and phase angle in series with the line to control active and reactive power flows on the transmission line. So, this inverter will exchange active and reactive power with the line. The reactive power is electronically provided by the series inverter, and the active power is transmitted to the dc terminals. The shunt inverter is operated in such a way as to demand this dc terminal power (positive or negative) from the line keeping the voltage across the storage capacitor Vdc constant. So, the net real power absorbed from the line by the UPFC is equal only to the losses of the inverters and their transformers. The remaining capacity of the shunt inverter can be used to exchange reactive power with the line so to provide a voltage regulation at the connection point.

C. Operating Modes of UPFC.
The UPFC has many possible operating modes they are as follows:

VAR Control Mode: The reference is an inductive or capacitive VAR request. The shunt inverter control translates the Var reference into a corresponding shunt request and adjusts gating of the inverter to establish the desired current. For this mode of control a feedback signal representing the dc bus voltage, vdc, is also required.

Automatic Voltage Control Mode: The shunt inverter reactive current is automatically regulated to maintain the transmission line voltage at the pint of connection to a reference value. For this mode of control, voltage feedback signals are obtained from the sending end bus feeding the shunt coupling transformer. The serried inverter controls the magnitude and angle of the voltage injected in series with the line to influence the power flow on the line. The actual value of the infected voltage can be obtained in several ways.

Direct voltage injected Mode: The reference input are directly the magnitude and phase angle of the series voltage. Phase Angle Shifter Emulation mode: The reference input in phase displacement between the sending end voltage and the receiving end voltage. Line Impedance Emulation mode: The reference input is an impedance value to insert in series with the line impedance Automatic Power Flow Control Mode: The reference inputs are values of P and Q to maintain on the transmission line despite system changes.

III. SIMULINK MODEL OF IEEE 6 BUS AND IEEE 14 BUS SYSTEM

This chapter presents simulink model of IEEE 6 bus and IEEE 14 bus system. IEEE 6 bus test system is implemented in MATLAB SMULINK software, by with and without UPFC. Similarly IEEE 14 bus test system is also implement by with and without UPFC, in IEEE 14 bus test system UPFC is situated in every possible line and the best location is determined considering the minimum active power loss, reactive power loss through the line and the profile of the voltage.

A. Simulink Model of 6 bus system with and without UPFC
Simulations are carried out in Matlab10. The simulation was run for 20 seconds without the UPFC controller. The Simulink model is developed from the basic functions available in the Simulink library. The power flow in a 500 KV/230 KV transmission system is shown. The system is connected in a loop configuration, consists of six buses (B1 to B6) interconnected through 11 transmission lines (L1 to L11) and four 500 kV/230 kV transformer banks Tr1 to Tr4. Two power plants located on the 230 kV system generates a total of 2200 MW (illustrated in figure 2) which is transmitted to a 500 kV, 1500 MVA equivalent.

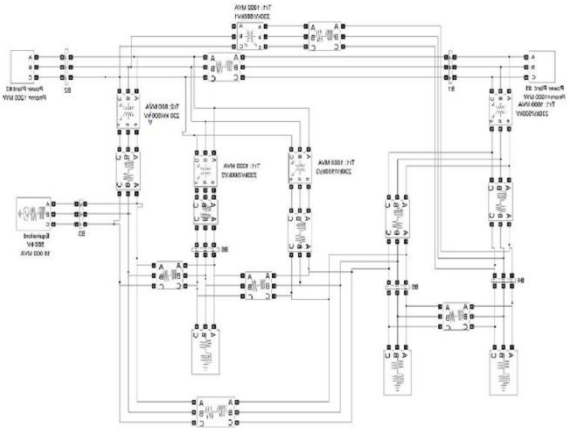

Figure 2 Simulink model of IEEE 6 bus system without UPFC

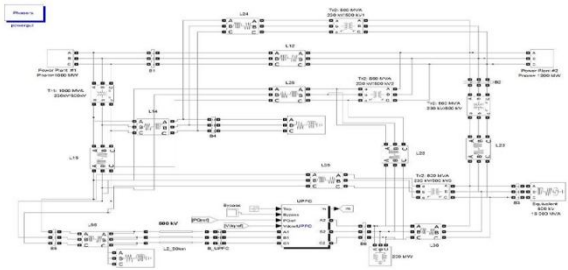

Figure 3 Simulink model of IEEE 6 bus system with UPFC

Here, in Figure 3 FACTs device UPFC is equipped between bus-5 and bus-6 its improvement in the voltage magnitude from sending end to receiving end is tabulated and the amount of percentage decreased in the losses is compared by with and without UPFC of IEEE 6 bus system.

B. Simulink Model of 14 bus system with and without UPFC

Simulations are carried out in Matlab10. The simulation was run for 20 seconds without the UPFC controller. The Simulink model is developed from the basic functions available in the Simulink library and from the various tool-boxes available. The power flow in a 500 KV/230 KV transmission system is shown. The system is connected in a loop configuration, consists of 14 buses (B1 to B14) interconnected through 20 transmission lines (L1 to L20) . Two power plants located on the 230 kV system generates a total of 2200 MW (illustrated in figure 4) which is transmitted to a 500 kV, 1500 MVA equivalent.

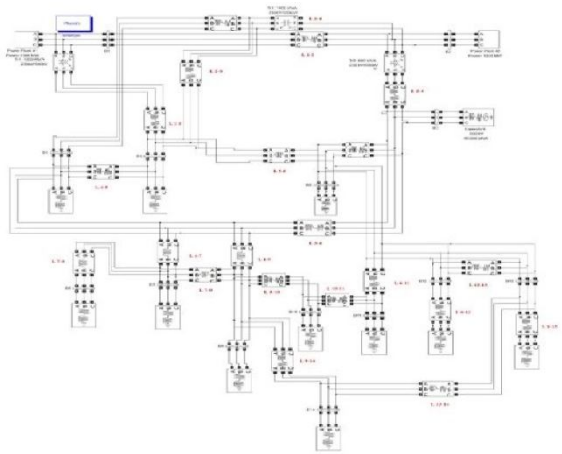

Figure 4: MATLAB Simulink model of IEEE 14 bus system without UPFC

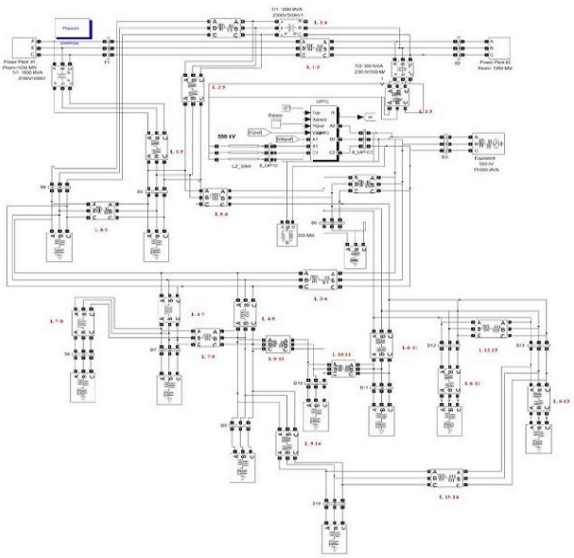

Figure 4: MATLAB Simulink model of IEEE 14 bus with UPFC in line-5

Here, in Figure 5 FACTs device UPFC is equipped between bus-2 and bus-5 its improvement in the voltage magnitude from sending end to receiving end is tabulated and the amount of percentage decreased in the losses is compared by with and without UPFC of IEEE 14 bus system.

IV. RESULTS AND DISCUSSIONS:

A.In this section gives the results of 6- bus system with and without FACTS controller.

Table 1
6 bus Voltage profile without UPFC

BUS NO	Voltage (p.u)	Real power (MW)	Reactive power (MVAR)
1	0.7105	-3.192	-7-019
2	0.7081	13.91	17.31
3	0.5726	16.55	10.87
4	0.566	5.246	2.96
5	0.563	-4.105	-1.555
6	0.5694	3.601	4.201

6 bus voltage profile with UPFC

BUS NO	Voltage (p.u)	Real power (MW)	Reactive power (MVAR)
1	0.9923	-0.0606	-3.863
2	0.9922	5.236	0.1224
3	0.9913	19.08	-3.013
4	0.9917	1.033	1.033
5	0.9917	1.788	0.5783
6	0.9913	0.7549	0.8612

Table 2
IEEE 6 bus total line losses without UPFC

Bus p-q	Line no	Real power (MW)	Reactive power (MVAR)
1-2	1	0.0107	-0.45087
1-4	2	0.0106	-0.45063
1-5	3	0.0106	-0.45063
2-3	4	0.0106	-0.4504
2-4	5	0.0107	-0.45063
2-5	6	0.0107	-0.45063
2-6	7	0.0106	-0.4504
3-5	8	0.0106	-0.45016
3-6	9	0.0106	-0.44993
4-5	10	0.0106	-0.45039
5-6	11	0.0106	-0.45016
TOTAL LOSS		**0.1169**	**-4.95483**

IEEE 6 bus total line losses with UPFC

Bus p-q	Line no	Real power (MW)	Reactive power (MVAR)
1-2	1	0.0543	-2.3043
1-4	2	0.0434	-1.8413
1-5	3	0.0432	-1.8318
2-3	4	0.0438	-1.8568
2-4	5	0.0433	-1.8354
2-5	6	0.0431	-1.8258
2-6	7	0.0435	-1.8462
3-5	8	0.0348	-1.476
3-6	9	0.0352	-1.4537
4-5	10	0.0344	-1.4593
5-6	11	0.0346	-1.4687
TOTAL LOSS		**0.4536**	**-18.91747**

From table 1 after adding UPFC the voltage profile is maintained to per unit value, in table 2, The total active power loss get decreased from 0.4536MW to 0.1169MW and the total reactive power loss in the systemdecreased from -4.954Mvar to -18.91747Mvar.

B. In this section gives the results of 14- bus system with and without FACTS controller

Table 3
14 bus Voltage profile without UPFC

BUS NO	Voltage (p.u)	Real power (MW)	Reactive power (MVAR)
1	0.7674	-1.288	0.5741
2	0.7675	14.24	16.28
3	0.5517	17.73	6.365
4	0.5473	6.978	0.7947
5	0.5462	5.618	1.975
6	0.5467	0.09794	0.06558
7	0.5473	0.19	0.1112
8	0.5473	0.8246	0.1672
9	0.5473	0.2582	0.1453
10	0.5472	0.07877	0.05076
11	0.547	0.03062	0.01575
12	0.5467	0.05334	0.01399
13	0.5467	-0.624	0.2376
14	0.5466	0.1303	0.04372

14 bus Voltage profile with UPFC

BUS NO	Voltage (p.u)	Real power (MW)	Reactive power (MVAR)
1	0.9928	2.488	-0.3245
2	0.9928	14.91	-0.1841
3	0.9925	17.35	-2.695
4	0.9929	4.358	-0.4225
5	0.9929	11.06	-0.4652
6	0.9925	0.8985	-0.2499
7	0.9928	0.3208	0.1878
8	0.9928	1.393	0.2824
9	0.9928	0.4362	0.2454
10	0.9928	0.1331	0.08575
11	0.9926	0.05173	0.02661
12	0.9925	0.09014	0.02364
13	0.9925	-0.1054	0.5743
14	0.9924	0.2201	0.07387

From table 3 after adding UPFC the voltage profile is maintained to per unit value, in table 4, The total active power loss get decreased from 0.730MW to 0.2120MW and the total reactive power loss in the system decreased from -32.9621Mvar to -5.86264Mvar

Table 4
IEEE 14 bus losses without UPFC

Bus p-q	Line no	Real power (MW)	Reactive power (MVAR)
1-2	1	0.0106	-0.30705
1-5	2	0.0106	-0.3421
2-3	3	0.0106	-0.3068
2-4	4	0.0106	-0.3069
2-5	5	0.0106	-0.3069
3-4	6	0.0106	-0.30665
4-5	7	0.0106	-0.30664
4-7	8	0.0106	-0.30665
4-9	9	0.0106	-0.30665
5-6	10	0.0106	-0.30665
6-11	11	0.0106	-0.30665
6-12	12	0.0106	-0.30665
6-13	13	0.0106	-0.30665
7-8	14	0.0106	-0.30665
7-9	15	0.0106	-0.30665
9-10	16	0.0106	-0.30665
9-14	17	0.0106	-0.30666
10-11	18	0.0106	-0.30665
12-13	19	0.0106	-0.30665
13-14	20	0.0106	-0.30656
TOTAL LOSS		**0.2120**	**-5.86264**

IEEE 14 bus losses with UPFC

Bus p-q	Line no	Real power (MW)	Reactive power (MVAR)
1-2	1	0.0636	-2.6971
1-5	2	0.0453	-1.9198
2-3	3	0.0457	-1.9389
2-4	4	0.0454	-1.9235
2-5	5	0.0453	-1.9198
3-4	6	0.0326	-1.383
4-5	7	0.0323	-1.3688
4-7	8	0.0323	-1.3723
4-9	9	0.0324	-1.3723
5-6	10	0.0322	-1.3676
6-11	11	0.0323	-1.3689
6-12	12	0.0322	-1.3688
6-13	13	0.0322	1.3713
7-8	14	0.0323	-1.3723
7-9	15	0.0324	-1.3713
9-10	16	0.0324	-1.369
9-14	17	0.0323	-1.3688
10-11	18	0.0323	-1.3711
12-13	19	0.0322	-1.3687
13-14	20	0.0323	-1.3688
TOTAL LOSS		**0.730**	**-32.9621**

CONCLUSION

In this project the simulation result show that for IEEE 6-bus system with controller UPFC the real power has decreased from 0.4536MW to 0.1169 MW with 25% of loss reduction. Similarly in this project for IEEE 14 bus system with controller UPFC the real power has decreased from 0.730MW to 0.2120MW with 29% of losses reduction. Voltage compensation using UPFC is studied for IEEE 6-bus and IEEE 14-bus system. Simulation result shows the effectiveness of UPFC to control the real and reactive powers. It is found that there is an improvement in the voltage magnitude of both 6 bus and 14 bus system with UPFC .The results are shown in both graphical and mathematical. As shown in simulation result, the voltage magnitude without UPFC is less than the per unit value, after adding UPFC to the transmission line voltage magnitude is maintained to per unit value. In the project, the simulations results shows that the UPFC changes the real and reactive power of the system in any location, but the optimal location present the best benefit on power losses. UPFC‘s effectiveness for loss minimization is verified.

REFERENCES

[1]. Narain G.Hingorani and Laszlo Gyugyi, “Understanding FACTS: concepts and technology of flexible AC transmission systems”,2000 Edition.

[2]. K.R. Padiyar, “FACTS Controllers in Power Transmission and Distribution”,2007Edition.

[3]. Acharya N. et al., “FACTs about flexible AC transmission systems (FACTS) controller: Practical installation and benefits”, Australian Universities Power Engineering Conference(AUPEC),Hobart, Tasmania, Australia, September 25-28,2005.

[4]. Loss minimization by incorporation of UPFC in load flow studies, s.v. ravi kumar and s. Siva nagaraju. International journal of electrical and power engineering 1(3):321-327.

[5]. Power Flow Control with UPFC in Power Transmission System, Samina Elyas Mubeen, R. K. Nema, and Gayatri Agnihotri, World Academy of Science, Engineering and Technology 47 2008.

[6]. Load Flow Management in the Interconnected Power Systems Using UPFC Devices C. Bulac Member IEEE, M. Eremia Senior Member IEEE, R. Balaurescu, and V. Ştefănescu.

[7]. Steady State Analysis of Unified Power Flow Controller: Mathematical Modeling and Simulation Studies A.M. Vural, Student Member, IEEE, and M. Tumay.

[8]. L. Gyugyi, C.D. Schauder, S.I. Williams, T.R. Reitman, D.R. Torgerson, and A. Edris, 1995,“The Unified Power Flow Controller.

★★★