COMBINED AC-DC TRANSMISSION-POWER NEED OF LOADED SOCIETY

HAZIQUL YAQUIN

B.Tech (Electrical & Electronics Engineering), JNTU Hyderabad - INDIA
E-mail: hyaquin@gmail.com

Abstract- This big difficulty needs to be fixed out by some other options like as dealt in this small paper of increasing the load being carried out by long extra high voltage AC lines instead of those towerfull constructions, by adding more power in the form of DC instead of AC.

I. INTRODUCTION

The societies of most countries due to industrialization have been in seek of more spaces for buildings touching the skies, making it difficult for the electrical officials to find passages for the transmission lines to supply the increased load demand. This big difficulty needs to be fixed out by some other options like as dealt in this small paper of increasing the load being carried out by long extra high voltage AC lines instead of those towerfull constructions, by adding more power in the form of DC instead of AC.

II. METHODOLOGY:

The extra high voltage AC transmission lines which have already been powerfully loaded to their fair marginal limits of thermis, do not allow more AC power to be loaded as it directly disrupts the transient stability of the system when close to the thermal limits of the lines, which is but not affected by the DC power even at the thermal limits of the lines. So loading those long distance extra high voltage AC lines close to their thermal limits by superimposing DC power on the existing usual AC power instead of AC power, provides a hopeway to the upset electrical officials to distribute the increased load demand with minor engineering alterations maintaining the stability of the system. In this technique even no major alterations in the conductors, insulators, strings and tower structures are required to get the power optimally upgraded to the desired level.

III. DESIGN:

The synchronous generator is as usual generating the high 3-phase AC power to be transferred from sending end bus system B_5 to the receiving end bus system B_6 and onwards to the infinite bus system in the long distance extra high voltage double circuit AC transmission line (EHV AC) as shown in the figure 1.

A 6-pulse rectifier circuit extracts upto that minimum value of the generated AC power for which the system stays well stable and this AC power is being converted (rectified) to DC power and feeded to the 3-phase zig-zag sending end transformer. Now this DC power is transmitted by a conventional bipolar HVDC link parallely along with the left unaltered AC power from the sending end to the receiving end bus system on the same line simultaneously. At the receiving end the 3-phase DC power is feeded to the zig-zag receiving end transformer followed by a 6-pulse inverter circuit which converts (inverts) it back into AC power which then combines with the unaltered usual AC power, resulting in a very high AC power available at the receiving end.

The zig-zag windings are utilized in both end terminal transformers to avoid their saturation due to DC power. The two 6-pulse converters, one being rectifier circuit at the sending end & the other being inverter circuit at the receiving end, along with bipolar HVDC link constitute the “Line commutated 12-pulse converter with bipolar HVDC link system”. AC filters and shunt capacitors at both the ends are utilized to filter and bypass the attenuations to maintain the transient stability of the system. The first line of the double circuit EHV AC-DC composite transmission line system acts as the main line to carry 3-phase DC current superimposed on the usual 3-phase AC current while the second line acts as the return path for the DC current. Each conductor of the main line carries $I_{dc}/3$ of the DC current along with the usual per phase AC current I_{ac} i.e $(I_{ac} + I_{dc}/3)$ as a whole divided equally in 3-phases of the main line.

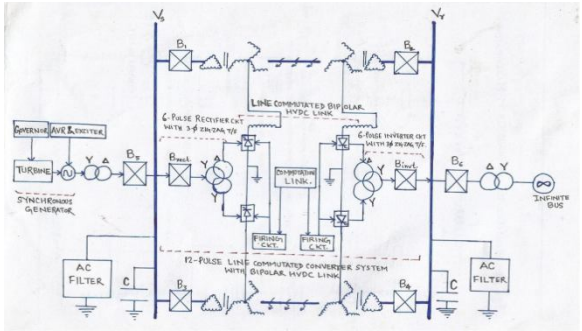

Fig 1: circuit design for composite AC-DC transmission using double ckt EHV AC line for power upgradation.

I_{dc} is the DC link current which is to be superimposed on the usual AC current to upgrade the power being transferred.

IV. EQUIVALENT CIRCUIT & RESULT ANALYSIS:

The rectifier operates under constant current control mode and the inverter operates under constant extinction angle control mode of the system. The equivalent circuit of the model of composite AC-DC double circuit long EHV AC transmission line is given by lumped π network as shown in the figure 2. The first main line is the transmission path for the superimposed AC-DC current, the second line is the return path of the DC current and the dotted line indicates the return path for the AC current.

I_s and I_r are the sending end and receiving end current components of the AC current.

V_s and V_r are the sending end voltage and receiving end voltage components of the AC voltage.

P_s and P_r are the sending end & receiving end active AC power components of the total power.

Similarly, Q_s and Q_r are the sending end & receiving end reactive AC power components of the total power transmitted respectively.
P_{dr} and P_{di} are the active DC power of the rectifier and inverter respectively.
Q_{dr} and Q_{di} are the reactive DC power requirement of the rectifier and inverter respectively.

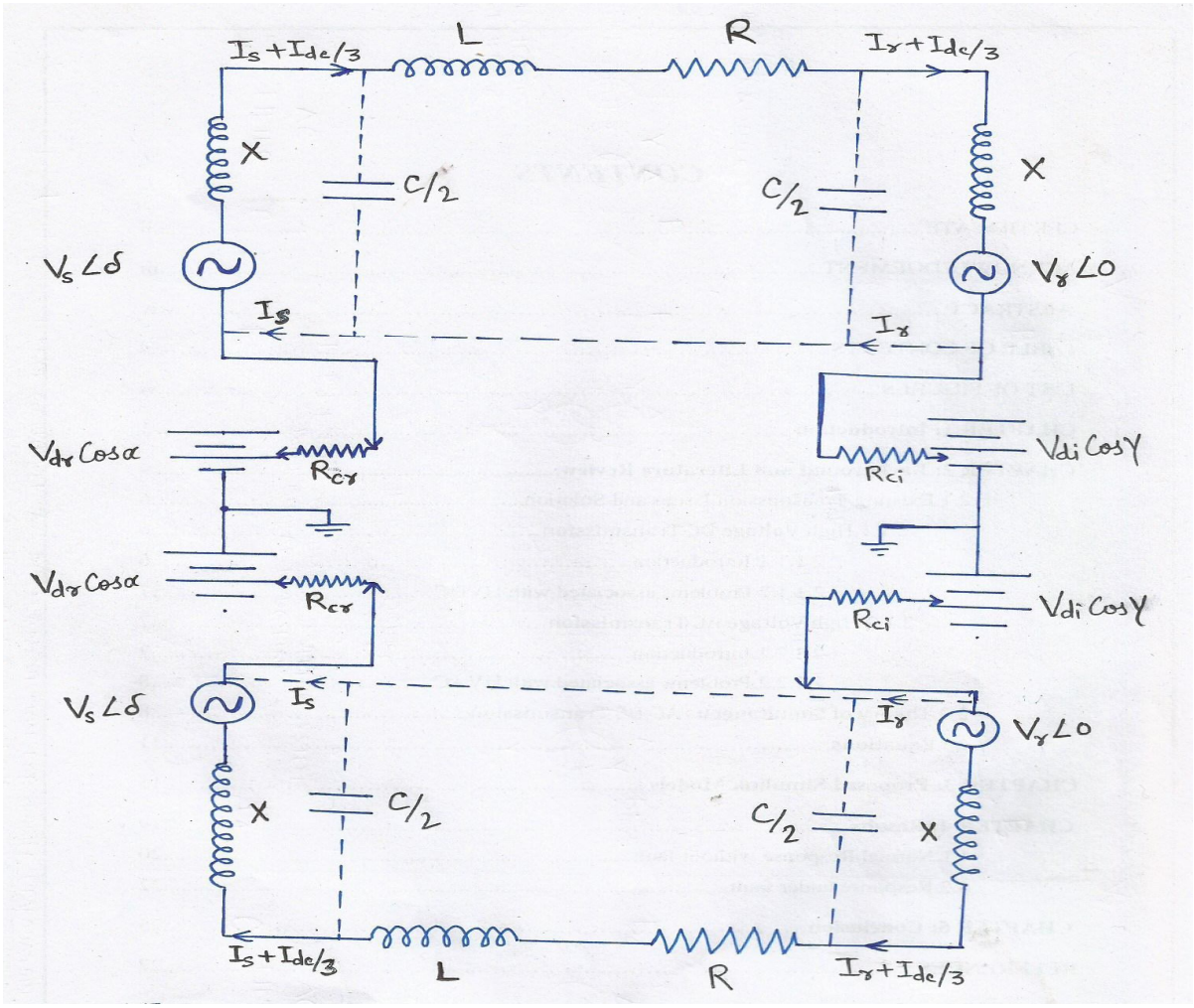

Fig 2: Equivalent circuit for composite AC-DC transmission using double ckt EHV AC line for power upgradation.

I_{dc} is the DC link current.
V_{dr} and V_{di} are the maximum values of DC voltages of the rectifier and inverter respectively and are equal to $3\sqrt{2}/\pi$ times the converter input line-to-line AC voltage.

R_{cr} and R_{ci} are the commutation resistances of the rectifier & inverter respectively.

R, L and C are the per phase line parameters of each line of which C is equally divided into two part i.e. C/2

X is the high reactance utilized to reduce the harmonics in the DC current.

α and γ are ignition or firing angle of the rectifier and extinction angle of the inverter respectively.

Now using the A, B, C & D line parameters, the expressions for sending end voltage and current can be written as :

$$V_s = AV_r + BI_r \quad (1)$$
$$I_s = CV_r + DI_r \quad (2)$$

Neglecting the resistances of the zig-zag transformers and the lines, the expressions for DC link current, active DC power of rectifier and active DC power of inverter can be written as:

$$I_{dc} = (V_{dr}\cos\alpha - V_{di}\cos\gamma)/(R_{cr} + R_{dc} - R_{ci}) \quad (3)$$

Where R_{dc} is the HVDC link's equivalent resistance. Since the DC active power components of rectifier & inverter are :

$$P_{dr} = V_{dr}I_{dc} \quad (4)$$
$$P_{di} = V_{di}I_{dc} \quad (5)$$

And the DC reactive power components of rectifier & inverter are :

$$Q_{dr} = P_{dr}\tan\theta_r \quad (6)$$
$$Q_{di} = P_{di}\tan\theta_i \quad (7)$$

Where θ for rectifier & inverter is obtained from the following relations:

$$\cos\theta_r = [\cos\alpha + \cos(\alpha+\mu_r)]/2$$
$$\& \cos\theta_i = [\cos\gamma + \cos(\gamma+\mu_i)]/2$$

Where μ_r and μ_i are the commutation or overlap angles of the rectifier and inverter respectively.

So overall or total sending end & receiving end active power is given as:

P_{st} = sending end active AC power + active DC power of the rectifier

or

$$P_{st} = P_s + P_{dr} \quad (8)$$

and

P_{rt} = receiving end active AC power + active DC power of the inverter

or $$P_{rt} = P_r + P_{di} \quad (9)$$

Similarly, overall or total sending end & receiving end reactive power is given as:

Q_{st} = sending end reactive AC power + reactive DC power of the rectifier

or $$Q_{st} = Q_s + Q_{dr} \quad (11)$$

and

Q_{rt} = receiving end reactive AC power + reactive DC power of the inverter

or $$Q_{rt} = Q_r + Q_{di} \quad (12)$$

So as the reactive power has no effect on power loss, the transmission line power loss can be given as:

$$P_{Loss} = P_{st} - P_{rt}$$

or $$P_{Loss} = (P_s + P_{dr}) - (P_r + P_{di}) \quad (13)$$

Now, let I_{ac} be the rms component of the main AC current of the line, then total rms current per conductor will be:

$$I = \sqrt{[I_{ac}^2 + (I_{dc}/3)^2]} \quad (15)$$

This is called the Thermal limit current I_{th} of the conductor Similarly, let V_{ph} be the per phase rms component of the original or main AC voltage of the line and V_{ac} be the per phase AC voltage component of the composite AC-DC with DC superimposed on it, then the peak or maximum V_{max} voltage will be $\sqrt{2}$ times the per phase rms component V_{ph}

i.e $V_{max} = \sqrt{2}V_{ph}$

but $V_{ph} = (V_{dc} + \sqrt{2}V_{ac})/\sqrt{2}$

hence $$V_{max} = V_{dc} + \sqrt{2}V_{ac} \quad (16)$$

Since power loss of each line is divided into three conductors, so the power loss per conductor in general can be given as:

$$P_{Loss}/3 = I^2R$$

i.e $$P_{Loss} = 3I^2R \quad (17)$$

The power transfer through the double circuit line before the conversion of part of AC into DC is nothing but the AC power given by:

$$P_{ac} = 3V_{ac}^2\sin\delta_1/X \quad (18)$$

Where X = transfer reactance per phase of the double circuit line

δ_1 = power angle between the voltages at the two ends $\leq 30^0$ to maintain the transient stability

Now when the DC power is superimposed on AC power, then the total power transferred through this double circuit composite AC-DC long EHV AC transmission line is given by:

$$P_{total} = P_{ac} + P_{dc}$$
$$= 3V_{ac}^2\sin\delta_2/X + 2V_{dc}I_{dc} \quad (19)$$

Where δ_2 is the power angle between the voltages at the two ends.

It changes from δ_1 to δ_2 due to the superimposition of P_{dc} on P_{ac} Hence the total percentage power upgraded in the composite AC-DC transmission line during the power transfer can be calculated as

% $P_{upgraded}$ = [(power transferred by composite AC-DC line – power transferred due to pure AC line)/(Power transferred by pure AC line)]*100 %

or

$$\% P_{upgraded} = [(P_{total} - P_{ac})/P_{ac}] * 100\ \% \quad (20)$$

note, P_{ac} of composite AC-DC line and that of pure AC line are different.

CONCLUSION:

The "Combined AC-DC Transmission-Power Need Of Loaded Society" by the conversion of a pure double circuit long EHV AC Transmission Line into a Composite AC-DC Line using a "Line Commutated

12-Pulse Converter With Bipolar HVDV Link Circuit" will provide the transmission with the most optimum upgradation of the Active Power being transferred from the sending end to the receiving end of about 83 % by superimposing DC power to the usual AC power upto the conductor's thermal limits without disturbing the stability and modifying the size of the conductors, insulators and tower structures.

REFERENCES:

[1]. "Upgradation of Existing EHVAC Line by Composite AC-DC Transmission", International Conference on Communication, Computer and Power (ICCCP), MUSCAT, by H. Rahman.

[2]. "Power Upgrading of Transmission Line by Combining AC– DC Transmission", IEEE Transactions on Power Systems, Vol. 22, No. 1, by H. Rahman & B. H. Khan.

★★★