# A I/Q UP MIXER WITH LOW PASS FILTER (LPF) FOR 5.8 GHZ TRANSMITTER APPLICATIONS

[1]YAN DAN LEI, [2]YOSHIDA AKIRA, [3]KASA YASUSHI, [4]M. K.RAJA

[1,4]Institute of Microelectronics, A*STAR, Singapore
[2,3]CM Engineering Co., Ltd, Japan
E-mail: yandl@ime.a-star.edu.sg

**Abstract** - This paper presents a I /Q up mixer with a low pass filter (LPF) for 5.8 GHz transmitter applicationsin 55nm CMOS process. The up mixer could cover the 5.8GHz frequency band and support π/4-QPSK modulation. The data rate could be up to 4096kbps.

**Keywords**: CMOS, DSRC, Transmitter, DAC, LPF, Mixer,

## I. INTRODUCTION

Wireless communication is widely used in modern life, from the few MHz near field wireless detector to 4G mobile, Bluetooth, WLAN to Terahertz radar application. The core wireless communication is the data transmission through the different frequency range Electromagnetic wave radiation. In a wireless communication system, two-way radio that combines both a radio transmitter and a receiver is named transceiver. The physical layer of communication system is mainly the transceiver as in [1] that is a combination transmitter/receiver in a single package for short-range communication. The transmitter is used to send data and information to others' receivers at specified radio frequency. The up mixer is used to convert the baseband IF signal to the modulated RF signal. This paper presents a I/Q up mixer with a low pass filter(LPF) for 5.8 GHz transmitter applications [1] in 55nm CMOS process. The up mixer could cover 5.8GHz frequency band and support π/4-QPSK modulation. The data rate could be up to 4096kbps. The following sections are included as below in this paper. In Section 2, the architecture of I/Q up mixer with the LPF is introduced and the building blocks of up mixer are explained in detail. Meanwhile, design challenges and topologies are introduced also. The circuit and implementation are also briefly explained. In Section 3, the simulation results are presented and discussed with a conclusion.

## II. ARCHITECTURE OF UP MIXER WITH LPF

Mixer is a critical sub block in any RFIC. Most often Gilbert cell or a modified version of gilbert cell is used for the mixer, In order to generate modulated signal, I/Q up mixer is widely used, because it can generate any type modulation and data rate signal for transmitter. The block diagram oftypical5.8GHz I/QUp mixer with the LPF architecture is shown in The Fig.1. The up mixer consists of the following blocks. The baseband I/Q digital signal input to digital to Analog converters (DAC) with differential output. The output of the DACpass throughthe low pass filter (LPF) to generate the analog IF baseband I/Q signal.

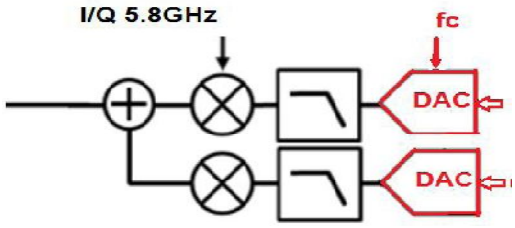


**Fig 1: The block diagram of 5.8GHzI/Q up mixer**

The IF baseband I/Q input signals is up-converted to RF transmitting frequency modulated signal(5.8GHz) by the I/Q up mixer. Then the RF modulated signal will be transmitted through the power amplifier.

### 2.1. Low pass filter (LPF)

The digital input to theDAC is QPSK base band signal with a maximum data rate 4096kps. In case of the QPSK signal, the bit rate is equal to twice the symbol rate as there are two bits per symbol. So the maximum frequency component is about 2 MHz Because DAC output is held constant till the next sample clock moment, the steps in the time domain of the signal are translated into high frequency spectral images spur. These images spurcan be found at the sample frequency(fc +/- fm), where fm is the signal frequency as show in Fig. 2.

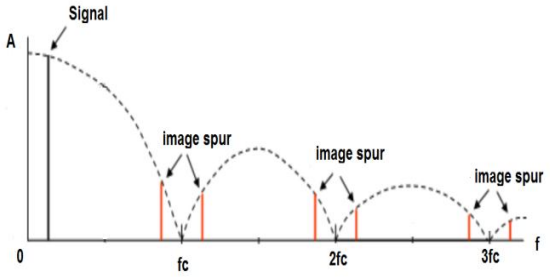


**Fig 2: The image spurs of DAC**

In this design, the sampling frequency (fc) isabout 32 MHz, for the maximum signal frequency of 2 MHz, there are -23.8dB attenuated image spurs at 30 MHz and 34MHz. In order to remove the above spurs, a 2 order LPF is employed at the output of DAC, with the cutoff frequencyof 3MHz.The LPF will give more than 40dB attenuation to the image spur. The total attenuation to image spur is more than 63dB.

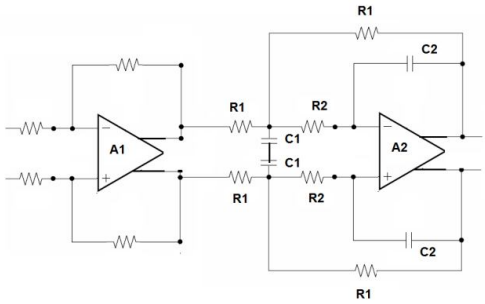


**Fig 3: The block diagram ofmultiple feedback(MFB) LPF**

The multiple feedback (MFB) second order differential filter topology was used in this design as shown in Fig.3. The amplifier A1 is used as a unit gain buffer, R1andC1 generate the first pole of LPF, R2 and C2 generatethe second pole ofLPF. The total order of LPF is 2.

## 2.2. I/Q up mixer

The I/Q up mixer is a gilbert cell based doublebalanced mixer configuration as shown in Fig.5. Gilbert cell [2][3] is widely used in RFICapplications, because of its compact size and moderately high performance. The full swing 5.8 GHz LO signal is used to turn on on/off the switch transistor, The ideal balanced structure above cancels any output at the LO frequency since the LOshows up as common mode.

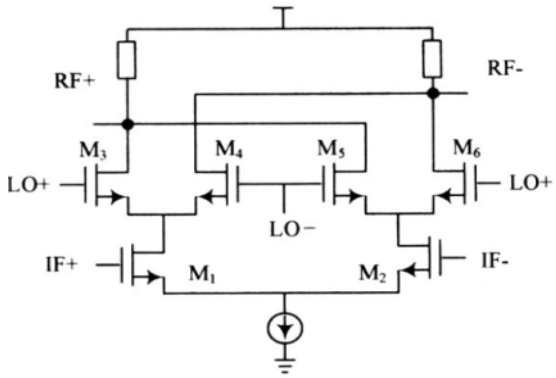


**Fig5: The schematic of Gilbert mixer**

I/Q up mixer include the 2 gilbert double-balancedmixers as shown in Fig.6. The loads of mixers are just combined to form the output. The 2 poly resistors are used as loads to generate the differential output signal.The Quadrature I/Q LO signalsare generated from a CML divide by 2circuits with an input frequency twice the RF frequency.

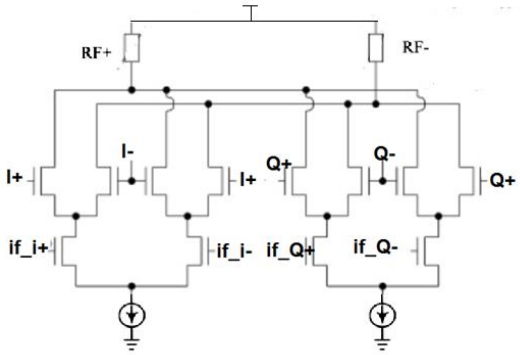


**Fig 6: The schematic ofI/Q up mixer**

## 2.3. Layout and implementation

The Layout of LPF is shown in Fig.7. Thelayout opamp is full symmetrical due to differential circuit. The LPF layout size is 150um X180um. The I/Q up mixer layout is shown in Fig.8. Thegilbert cell is carefully planned to meet symmetrical and balance layout. The differential I/Q 5.8GHz LO buffer and trace have equal length and same parasitic capacitor loading. The up mixer layout size is 250um X200um.

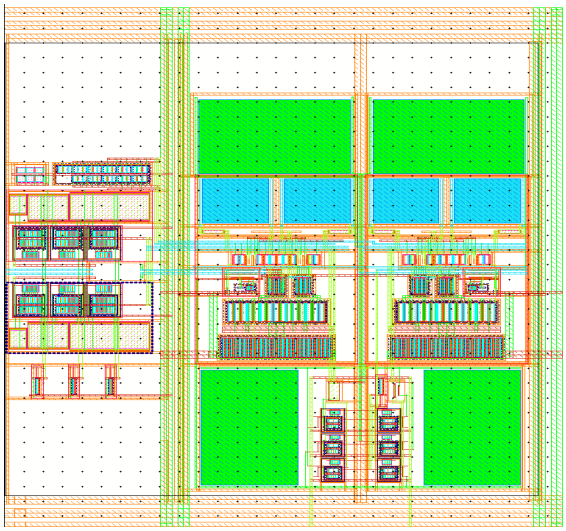

**Fig 7: The layout of low pass filter**

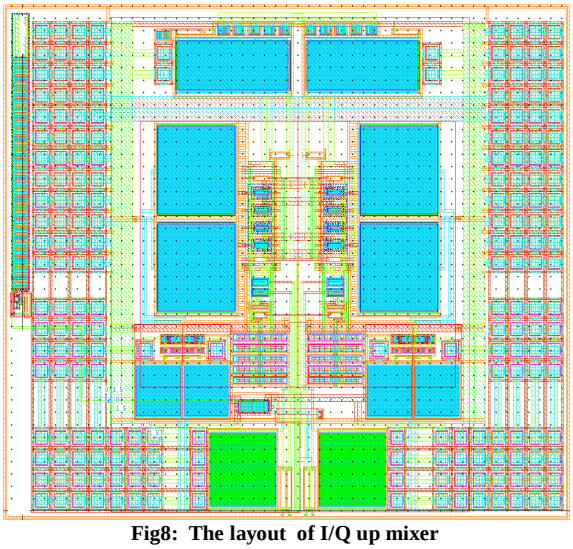

**Fig8: The layout of I/Q up mixer**

## III. RESULTS AND DISCUSSION

A 5.8GHz I/Q up mixer with LPF for transceiver applicationare implemented in 55nm standard CMOS process with RF option. The simulated cutofffrequency of LPF following DACis 3MHz and the attenuation is39dB at 32.7MHz as shown in Fig.9.The simulated conversion gain of up mixer is -3dB with 200ohm load. The output P1dB of up mixer is -7.9dBm as shown in Fig.10. by sweeping DC IF input. When LO frequency is 5.83GHz, IF frequency is 2.2MHz, The output IP3 powerof up mixeris -0.9dBm as shown in Fig.11. The I/Q up mixer could get a minimum 1.6% EVMerror as shown in Fig.12.

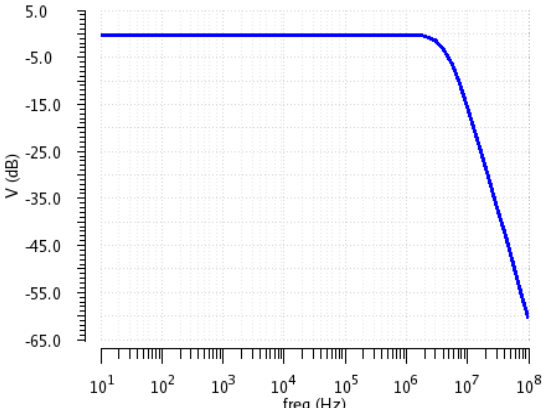


**Figure9: Frequency response of low pass filter (LPF)**

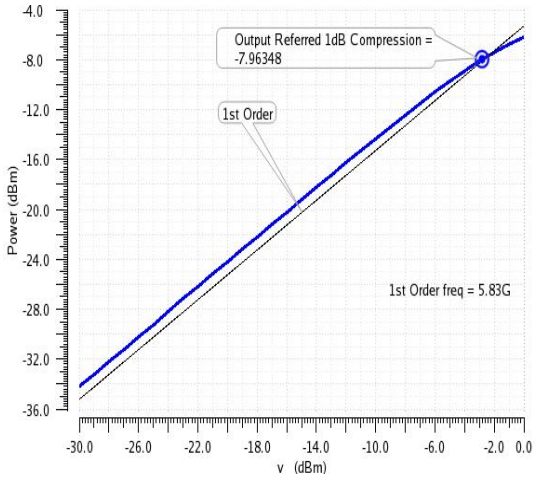


**Fig10: The output p1dB of up mixer**

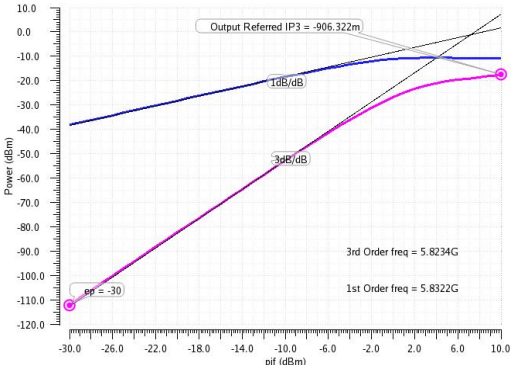


**Fig 11:The output IP3 of up mixer**

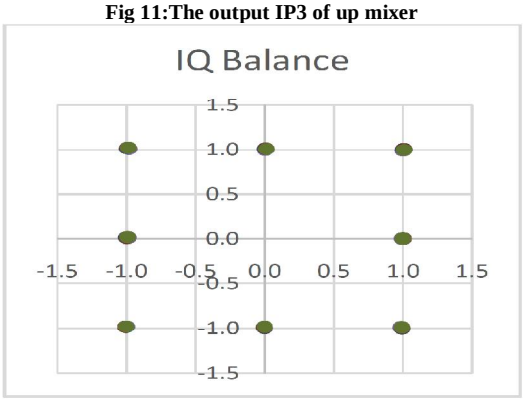


**Fig 12: EVM of I/Q up mixer**

This paper described the implementation of5.8GHz I/Q up mixer with low pass filter. The operation of the up mixeris evaluated using post layout simulation of 55-nm CMOS technology. The I/Q up mixer is proven to be useful in a wireless transceiver application.

## REFERENCES

[1] M.Kumarasamy Raja, Xuesong Chen, Yan Dan Lei, Zhao Bin, Ben Choi Yeung and Yuan Xiaojun., " A 18mW Tx 22mW Rx Tranceiver for 2.45GHz IEEE 802.15.4 WPAN in 0.18- µm CMOS ", IEEE A-SSCC, Dig. Tech. Paper,Nov. 2010.

[2] Hanen Saoudi, Mohamed Dhieb, .., "A 5.2 GHz high gain high isolation double balance Gilbert cell mixer with linearity improvement in TSMC 180nm CMOS technology for WLAN application," 18th International Conference on Sciences and Techniques of Automatic Control and Computer Engineering, pp.133-138, 2017.

[3] Chandra Yadav ; M. Annamalai Arasu and Wooi Gan Yeoh, "RF Transmitter in 90-nm CMOS for Multi-Band OFDM UWB," 2007 IEEE International Conference on Ultra-Wideband, Page s: 632 - 635. 2007.

★★★