DESIGN OF MODIFIED LPF USING IN SENSITIVE WIRELESS SYSTEMS

[1]MANAL HADI AL-JANABE, [2]DINA HARITH SHAKER, [3]BURAQ ABDUL HADI, [4]SABAHALDIN A. HUSSAIN, [5]AHMED ABDULQADER HUSSEIN

[1,2,3,5]Department of Electromechanical Engineering, University of Technology, Baghdad, Iraq
[4]Computer Science Department, College of Science, Aljufra University, Libya.
E-mail: manalhadi75@gmil.com, acoi98@yahoo.com , burak_abd@yahoo.com, sabahaldinalqaisi@yahoo.com, ahmedabdulqaderhussein@gmail.com.

Abstract - This paper aims to achieve sharp cut-off, low insertion-loss and high-selectivity of the modified low pass filter design. Two techniques are used for accomplishing the filter design. The first technique, each low –impedance line, acts as a shunt capacitor has been replaced by split-ring resonator (SRRS). While the other technique is etching circular-shape of complementary split-ring resonators (CSRRS) in the ground of substrate material underneath the SRRs. The modified filter shows better results in comparison to the conventional counterpart, i.e. flat pass-band and sharp cut-off, identical to numbers of unit cells of CSRR structures. Numerical results of convention LPF are presented. The design of the filter has been performed via utilizing high frequency structure simulation (HFSS) and planted on the Roger (RO3210) substrate material. The material specifications have been carried out with a dielectric fixed (ε_r=10.2), substrate height (h=1.27) . The modified filter is suitable to be used in sensitive wireless communication systems.

Index Terms - Low Pass, Filter, Meta-material, Resonator, Selectivity.

I. INTRODUCTION

Low-pass filters (LPFs) have been largely used to hold signal and harmonics. At designing an LPF, several requirements such as high/wide rejection band, low loss, sharp transition small size should be considered in many implementation [1]. Distributed elements LPFs in a conventional situation such as; semi-lumped element, stepped-impedance and an open-circuit stubs filters, can be get a gradual pass-band to stop-band transference with thin stop-band and large size which they are not accepted in the communication systems. To resolve these problems, many scientific studies introduced designs of micro-strip filters used defected ground structures (DGSs). (DGSs) are achieved by etching a slot in the backside of back-plane using printed circuit boards (PCBs) and MMIC technologies processes [2-4].
These processes are broadly used in several applying such as antennas, mixers, and other variety of filters [5-6]. Meta-material (MTM) is a known as artificial structure, effectively homogeneous and uncommon properties such negative relative permittivity and permeability not available in nature. Generally, split-ring resonator, SRR, is the first particle that was proposed to meta-material structures. Furthermore, it is essential artificial structures to accomplish magnetic responses at an electro-magnetic field over ultra-high frequencies [7-8]. Generated backward wave distribution by SRR with slim wire and further resonators has been realized [9,10]. Figure 1 illustrates the structures of SRR, which has been utilized to gain a negative range of permeability above the needed frequency domain. The propagation of the wave at resonant frequency will be limited by the negative permeability [11].

On the other side, a complementary, CSRR, is a negative of SRR and etching in the base of micro-strip line likes a DGS, this structure is used to gain, rise selectivity, faint insertion loss, sharp cut-off achievement, with a size decreased and flattest pass-band response.

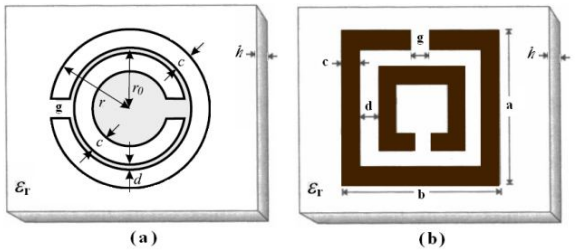

Figure1. Cells of SRR analysis, (a) Circle form, (b) Square form

Selectivity (ξ) can be considered as one of important parameters in LPF that is delineate as the relation between the difference attenuation to difference frequencies f_s and f_c.

$$\xi = \frac{\alpha_{min} - \alpha_{max}}{f_s - f_c} \quad (\frac{dB}{GHz}) \qquad (1)$$

Where, α_{min} and α_{max} are (-3dB), and (-20dB) attenuation degree from each f_s, f_c is (-20dB) stop-band and (-3dB) cut-off frequencies [16-17].
In this work, stepped-impedance lines as traditional lines in LPFs have been realized. The cut-off frequency of the traditional LPF model is 0.95 GHz. The further model of LPFs establish on meta-material components by applying rectangular SRR structure, and circular CSRRs etching in the earth plane are introduced. A flat pass-band with no ripples and selectivity enhancement can be achieved through the proposed filters. All presented works are simulated by applying a soft-High Frequency Structure Simulation

(HFSS) and implemented on Rogers (RO3210), substrate with ε_r dielectric fixed equal 10.2, loss tangent, tan (α) equals 19×10^{-4}, substrate height, h equals 1.27mm and thickness of micro-strip conductor, t equals 35×10^{-3}mm.

II. ANALYSIS OF LOWPASS FILTER DESIGN

To design the LPF it has to follow three basic steps, the first step is specifying the filter characteristics, the second step is designing the initial form of LPF and finally scaling and changing the design according to the desired filter specifications. The design form of the work is done with chebyshev approximation which exhibits the maximally flat stop-band and equal ripple pass-band. Figure. 2 explains the public structure of LC ladder kind stepped impedance of the LPF. The cascaded structure is illustrated via series inductors which is indicating the high impedance and shunt capacitors which is representing the low impedance of the transmission lines [18].

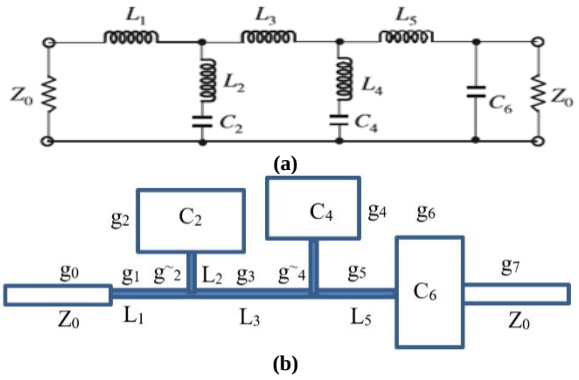

Figure 2. stepped-impedance LPF (a) equivalent circuit, (b) Structure

Table 1 specifies the class of filter (class 6) with element worth. The shunt inductive element represented as $g^{\sim}$ and g_0=g_7 represent the c/c$_S$ impedance for i/p and o/p ports. The odd order elements (g_1, g_3 and g_5) represent the series inductive. The even order represents the shunt line containing (capacitive and inductive elements).

Table 1. The class of filter with element worth

n	g_0	g_1	g_2	$g^{\sim}_2$	g_3	g_4	$g^{\sim}_4$	g_5	g_6	g_7
6	1	0.82	0.39	1.1	1.19	0.75	0.91	1.12	1.36	1

The typical filter has a minimum stop-band attenuation equal to 38dB and a pass-band ripple is equal to l0.18 dB at (Ω_s = 1.194) for the cut-off (Ω_c=1). The micro-strip filter is delineated to have a cut-off frequency (f_c=0.95GHz) and finally impedance Z_0 equal 50Ω at input/output ports. The values of element L-C, are scaled to f_c with Z_0 which can be specified by equation 2 and 3:

$$L_i = \frac{1}{2\pi f_c} Z_0 g_{Li} \quad (2)$$

$$C_i = \frac{1}{2\pi f_c} \frac{1}{Z_0} g_{ci} \quad (3)$$

The approximated values of L-C elements are listed in table (2)

Table 2. L-C element values

L_1	L_2	L_3	L_4	L_5	C_2	C_4	C_6
6.54 nH	3.1 nH	9.5 nH	5.9 nH	8.9 nH	3.5 PF	2.9 PF	3.6 PF

The two limited-frequency attenuation poles happened at;

$$f_{p1} = \frac{1}{2\pi\sqrt{L_4 C_4}} \approx 1.2\,GH_Z \quad (4)$$

$$f_{p2} = \frac{1}{2\pi\sqrt{L_2 C_2}} \approx 1.5\,GH_Z \quad (5)$$

For micro-strip investigation, a substrate with a proportion dielectric fixed equal to 10.2 and a thickness of 1.27, has been selected. The inductors will be achieved through employing the characteristic impedance with high-impedance lines (Z_L=93Ω), and the capacitors are achieved the characteristic impedance with low-impedance lines (Z_C = 14Ω). Table 3 Offered micro-strip design parameters [18].

Table 3. Micro-strip design parameters for LPF

Z_o (Ω)	Z_{oC}= 14	Z_o=50	Z_{oL}=93
W_o (mm)	W_c = 8	W_o=1.1	W_L=0.2
λ_{go} (mm) at f_c	$\lambda_{gc}(f_c)$=101	λ_{go}=112	$\lambda_{gL}(f_c)$=118
λ_{go} (mm) at f_{p1}	$\lambda_{gc}(f_{p1})$=83	λ_{go}= 90	$\lambda_{gL}(f_{p1})$=97
λ_{go} (mm) at f_{p2}	$\lambda_{gc}(f_{p2})$=66	λ_{go}= 72	$\lambda_{gL}(f_{p2})$=77

Where, Z_o is the characteristic impedance, W_o is the micro-strip line width, and λ_{go} is the guided wavelength.

By employing equations (6,7) it can be specified the sacrificial physical lengths:

$$l_{Li} = \frac{\lambda_{gL} f_c}{2\pi} \sin^{-1}\left(2\pi f_c \frac{L_i}{Z_{0L}}\right) \quad (6)$$

$$l_{Ci} = \frac{\lambda_{gc} f_c}{2\pi} \sin^{-1}(2\pi f_c Z_{0C} C_i) \quad (7)$$

From the equations (6 and 7), the lengths of the element in the proposed design are listed in table (4).

Table 4. Dimensions of design (all lengths in mm)

l_{L1}	l_{L2}	l_{L3}	l_{L4}	l_{L5}	l_{C2}	l_{C4}	l_{C6}
8.6	3.9	13	7.7	12.1	4.95	4.13	5.2

To attain a more exact model, reparations are needed for several un desirable reactance/susceptance and

micro-strip cut out. To recompense the undesirable reactance and susceptance offered at the cross of the micro-strip line elements for (L_5) and (l_{C6}), in order to find the correct length for (L_5) and (l_{C6}) by solving equations (8,9) [18].

$$2\pi f_c L_5 = Z_{OL}.\sin\left(\frac{2\pi l_{L5}}{\lambda_{gL} f_c}\right) + Z_{OC}.\tan\left(\frac{\pi l_{C6}}{\lambda_{gC} f_c}\right) \quad (8)$$

$$2\pi f_c C_6 = \frac{1}{Z_{0C}}.\sin\left(\frac{2\pi l_{c6}}{\lambda_{gL} f_c}\right) + \frac{1}{Z_{0L}}.\tan\left(\frac{\pi l_{L5}}{\lambda_{gL} f_c}\right) \quad (9)$$

The values of ($l_{C6} \approx 4.4mm$) and ($l_{L5} \approx 11.6mm$). The reparations of the undesirable reactance/susceptance at the cross of the inductive line elements for L_3 and L_1 as well as at the cross of the line elements for C_2 and L_2, may be done by edit l_{C2} and l_{L2}, while keeping l_{L3} and l_{L1} unaltered so that

$$\frac{1}{2\pi f L_2 - 1/2\pi f_c} = \beta_2 f + \Delta\beta_{123} \quad \text{at } f = f_c \text{ and } f_{p2} \quad (10)$$

Wherever the expression on the left-hand side is the desired susceptance of the string-resonant created section by C_2 and L_2, and on the right-hand side $\beta_2 f$ indicates a "recompense" susceptance created by the line elements for C_2 and L_2, is specified by:

$$\beta_2 f = \frac{1}{Z_{0L}\sin\left(\frac{2\pi l_{L2}}{\lambda_{gL} f}\right) + Z_{0C}\tan\left(\frac{\pi l_{c2}}{\lambda_{gc} f}\right) - \frac{1}{\frac{1}{Z_{0C}}\sin\left(\frac{2\pi l_{C2}}{\lambda_{gc} f}\right) + \frac{1}{Z_{0L}}\tan\left(\frac{\pi l_{L2}}{\lambda_{gL} f}\right)}} \quad (11)$$

The undesirable overall equivalent susceptance $\Delta\beta_{123}$ is introduced a result of the three inductive line elements and it can be assessed through:

$$\Delta\beta_{123}(f) = \frac{1}{Z_{0L}}\tan\left(\frac{\pi l_{L1}}{\lambda_{gL} f}\right) + \frac{1}{Z_{0L}}\tan\left(\frac{\pi l_{L2}}{\lambda_{gL} f}\right) + \frac{1}{Z_{0L}}\tan\left(\frac{\pi l_{L3}}{\lambda_{gL} f}\right) \quad (12)$$

In the end we can determined the all new length by using equation (10) as a solution at the cut-off frequency f_c and the desired attenuation pole frequency f_{p2}, the final model dimensions are specified in Table 5 [18-21].

Table 5. Final design dimensions

l_{L1}	l_{L2}	l_{L3}	l_{L4}	l_{L5}	l_{C2}	l_{C4}	l_{C6}
8.59	2.98	13	6.49	11.62	5.07	3.7	4.39

The final model specified in figure 3. The model is proved by the simulation, and the simulated frequency response of the micro-strip filter is explained in figure 3-C, offer two attenuation poles at cut-off frequency, whose result in a sharp rate cut-off as designed. It seems that the cut-off frequency occurs at 0.95GHz with respect to -3dB point. The pass-band ripple attenuation is -46dB at 1.3GHz frequency. The selectivity approximately ≅ 46-3/1.53-0.95= 107.5.

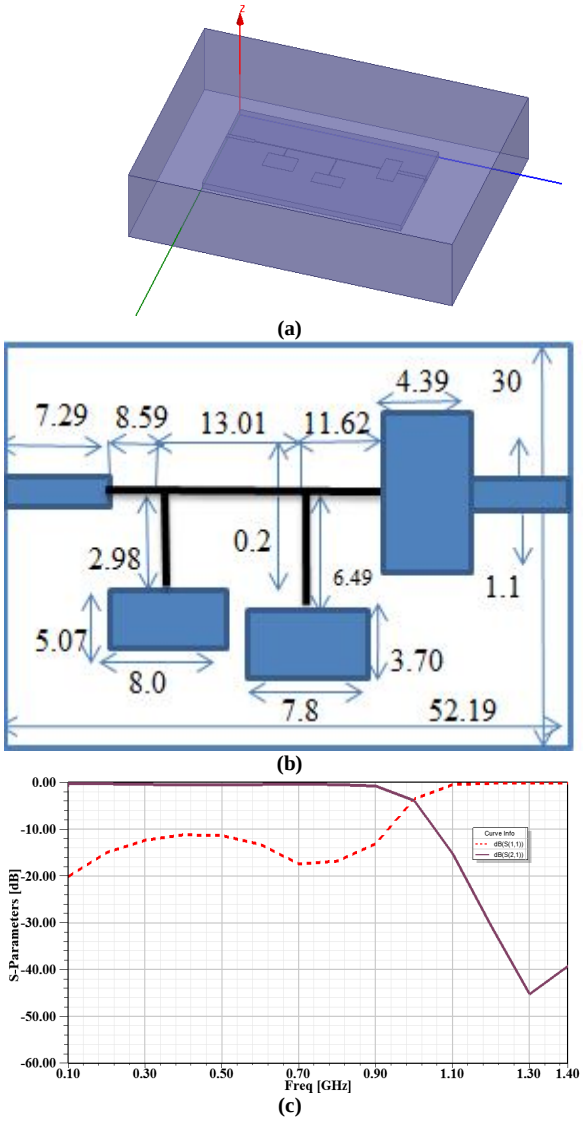

Figure 3. LPF (a) layout design, (b) layout of traditional RF LPF after approximation, (c) frequency response

III. SRR and CSRR CELLES SIMULATED RESULTS

1- SRR Cells

In this paper the two SRRs are applied by replacing the shunt capacitor in the synonymous circuit of the traditional model in order to achieve a sharp roll-off response. In Figure 4, The two rectangular split rings with a density of 0.035 mm and the geometric bounds (a, b, and c) are the first SRRs are 8mm, 5.07mm and 0.24 mm respectively. Meanwhile, the second SRR geometric parameters are 7.8 mm, 3.7 mm and o.24 mm respectively. The air-gap between the inside and out rings is equal to 0.12 mm with the splits in the inside and out rings has the same width equal 0.12 mm. The selectivity approximately ≅ 54-3/1.5-1.15 = 147.7.

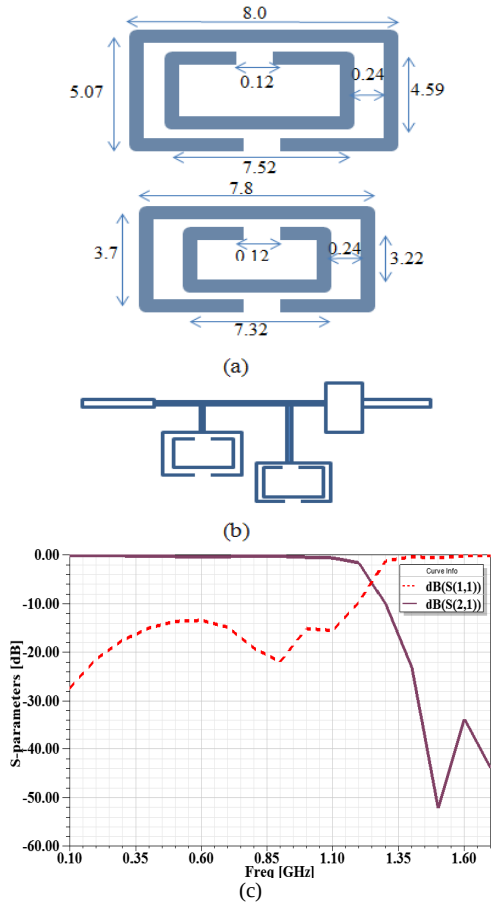

Figure 4. SRR (a) cells, (b)Structure, (c) frequency response

2- CSRRs Cells

There are two cells of circular ($CSRR_S$) etched in the lower plane as depicted in Figure 5-a, and the geometric bounds in diameter is shown in Figure 5-b. The frequency response of the modified filter contains SRRs cells and CSRRs cells is predicted in Figure 5-c. The selectivity approximation is equal to ≅ 42-3/1.2-1=195.

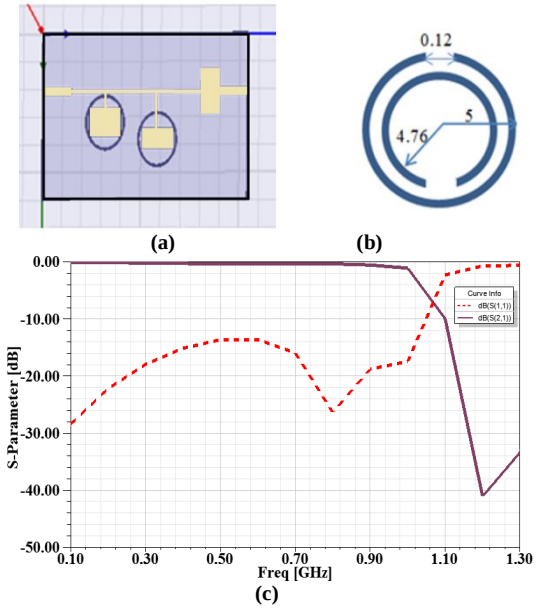

Figure 5. Modified LPF (a) layout filter design, (b) SRR dimensions in (mm), (c) S_{21} and S_{11} frequency response

3- LPF Simulated Results

The difference between the convention LPF and the (SRR, CSRRs) embedded LPF is visible from the characteristics that is shown in Figures 3, 4 and 5. Table 6 illustrates the simulation results. Regarding the pivotal results in Table 6, it is clear that the modified filters achieved better performance as compared with the traditional filter in terms of maximum attenuations and selectivity values.

Table 6. Results

Filter Type	Cut-off Frequency (GHz) at -3dB	Max Attenuation at Frequency Point	Selectivity dB/GHz
Conventional LPF	0.95	-46 at 1.3GH_Z	107.5
Modified SRRs -1	1.15	-54 at 1.5 GH_Z	145.7
Modified CSRRs - 2	1	-42 at 1.2 GH_Z	195

The comparison between our modified filter (the filter contains circular- CSRRs) with other filters with respect to cut-off Frequency, pass-band ripple, and size reduction, has been indicated in Table 7.

Table 7. Comparison between various modified LPFs

Designed filter	f_c (GHz)	Size reduction with respect to conventional design (approx.) %
Our filter	1.25	20
[22]	1.6	35
[16]	1.8	29
[3]	1.7	43

CONCLUSION

The presented work in this paper depends on traditional (LPF) as a base to design the modified filters in view of improving the filter's performance. The modified filters used SRRs and CSRRs tools to get several merits such as low insertion loss (IL), sharp cut-off with rise selectivity. The design size is decreased and has been done through using circular CSRRs. Further features of the modified filters contain of enhancing the selectivity as well. This work is achieved by using two-cells of circles (CSRRs) in the earth plane. The distribution bounds for the LPF incorporating SRRs particles, that explain a lot steeper roll-off than the traditional counterpart. Finally, in this work the merit is the high interval flatness gain with 0.05 dB insertion loss if compared with the other works.

REFERENCES

[1] T. S. Kiran and G. Kalaimagal, "Micro-wave Low Pass Filter Based on CSRR Using HFSS", International Conference on

Research Advances in Integrated or Navigation system, April, 2016.

[2] Qun Li, Yonghong Zhang, Daotong Li, and KaidaXu, "Compact Low-Pass Filters with Deep and Ultra-Wide Stopband using Tri- and Quad-Mode Resonators", IET Journals Microwaves, Antennas & Propagation, Vol. 11, No. 5, pp.743-748, 2017.

[3] Ahmed Hameed Reja, Asaad A. M. Al-Salih, and S. N. Ahmad, "A Meta-Materialized Design for 7 th Order Type-I Chebyshev LPF", Materials Today: Proceedings, Vol.4, No.9, pp. 10383–10389, 2017.

[4] A. Kumar, H. Alavi, J. A. Mix, E. C. Beltran, E. C. Perez, A. J. Vera, "Design of Nine Pole Microstrip Low Pass Filter with Metal Loaded Defected Ground Structure", IEEE MTT-S Latin America Microwave Conference, Mexico; Dec. 12-14, 2016.

[5] D. Gupta, S. Singh, S. Gupta, and P.K. Singhal, "Design of Microstrip Lowpass Filter with High Attenuation in Wide Stop band", Second International Conference on Computational Intelligence & Communication Technology, 2016.

[6] A. H. Reja, S. N. Ahmad, and D. A. Mahmood, "Study the Effect of Adding New Components on Conventional Microstrip LPF Design", International Conference on Computing for Sustainable Global Development, Delhi-India,5th– 7th March, PP.47-52, 2014.

[7] Y. Yang, H. Zhang, J. Luo "Design of Microstrip Low-Pass Filter based on Six-Slit-Ring DGS", International Conference on Intelligent Human-Machine Systems and Cybernetics, IEEE, 2016.

[8] J. B. Pendry, A. J. Holden, D. J. Robbins, and W. J. Stewart, "Magnetism from Conductors and Enhanced Nonlinear Phenomena", IEEE Trans. Microwave Theory and Techniques, Vol.47, No. 11, pp. 2075-2084, 1999.

[9] P. K. Singh, A. K. Tiwary, "Design of Switchable Microstrip Low Pass-Band Stop-Band Pass", Microwave and Optical Technology Letters, Vol. 59, No. 2, February 2017.

[10] J. B. Pendry, A. J. Holden, and W. J. Stewart, "Extremely Low Frequency Plasmons in Metallic Mesostructures", Phys. Rev., Vol. 76, No. 25, pp.4773-4776, 1996.

[11] Ho Lim, Jong-Hyuk Lee, Sang-Ho Lim, Dong-WookSeo, Dong-Hoon Shin, and Noh-Hoon Myung, "A Novel Compact Coplanar Waveguide Bandstop Filter Based on Split-Ring Resonators", Proceeding of ISAP2007, Niigata, Japan, 2007.

[12] S. Sahu, R. Mishra, and D. Poddar, "Compact Metamaterial Microstrip Low-Pass Filter", Journal of Electromagnetic Analysis and Applications, Vol. 3, No. 10, pp. 399-405, 2011.

[13] Selga, J. Aznar, F. Velez, A. Gil, M., Bonache, and J. Martin, "Low-Pass and High-Pass Microwave Filters with Transmission Zero Based on Metamaterial Concepts," IEEE International Workshop on Antenna Technology, pp. 1-4, 2009.

[14] He-XiuXu, Guang-Ming Wang, Chen-Xin Zhang, and Jian-Gang Liang, "Hilbert-Shaped Complementary Ring Resonator and Application to Enhanced-Performance Low Pass Filter with High Selectivity," International Journal of RF and Microwave Computer-Aided Engineering, Vol. 21, No: 4, pp. 399-406, 2011.

[15] Jian-Kang Xiao -Yu-Feng Zhu -Fu, and J. S., "Non-Uniform DGS Low Pass Filter with Ultra-Wide Stopband", Proceedings of the 9th International Symposium on Antennas, pp. 1216-1219, 2010.

[16] Ahmed Hameed Reja, M. A Alqaisy, S. N. Ahmed, and A. K. Abdul Raheem, "Design of Metamaterial Stepped-Impedance Microwave LPFs", Conference on Computer Applications and Information Systems (WCCAIS), IEEE publisher, pp.1-5, 2014.

[17] Jia-Sheng and M. J. Lancaster, Microstrip Filters for RF/Microwave Applications, John Wiley & Sons, Inc., 2001.

[18] X. Chen, T. M. Grzegorczyk, B. I. Wu, J. Pacheco, and J. A. Kong, "Robust Method to Retrieve the Constitutive Effective Parameters of Metamaterials", Phys., Vol. 70, No. 1, 2004.

[19] D. R. Smith, D. C. Vier, Th. Koschny, and C. M. Soukoulis, "Electromagnetic Parameter Retrieval from Inhomogeneous Metamaterials," Physical Review, Vol 71, No.1, 2005.

[20] J. L. Li, S. W. Qu, and Q. Xue, "Compact Microstrip Low-pass Filter with Sharp Roll-Off and Wide Stop- Band," IEE Electronics Letters, Vol. 45, No. 2, pp. 110-111,2009.

[21] Ahmed Hameed Reja, S. N. Ahmad, A. A. M. Al-Salih, "New ultra-wideband filters based on tuning forks shape and CSRRs," IEEE International Conference on Aerospace Electronics and Remote Sensing Technology (ICARES), Indonesia, 13-14 Nov. 2014.

[22] Ahmed Hameed Reja, Ahmed Abdulqader Hussein, Manal Hadi Jaber AL-Janabi, Manal Kadhim Oudah, Dina Harith Shaker, Mazin A. Hamzah, "Transceiver Low Pass Filter Design Based on Miniaturized Cells", International Journal of Industrial Electronics and Electrical Engineering, Vol.6, Issue 4, pp. 18-21, Apr. 2018.

★★★