COMPARATIVE ANALYSIS OF CASCODE LNA PERFORMANCE BASED ON MICROSTRIP MATCHING NETWORKS

[1]ABU BAKAR IBRAHIM, [2]CHE ZALINA ZULKIFLI

Faculty of Art, Computing and Creative Industry, Universiti Pendidikan Sultan Idris, Malaysia.
E-mail: bakar@fskik.upsi.edu.my, chezalina@fskik.upsi.edu.my

Abstract- This paper presents a comparative analysis of cascode LNA performance based on Microstrip matching networks applicable for wireless applications. The amplifier use FHX76LP Low Noise SuperHEMT FET. The LNA designed used four types of matching network consisting of lump reactive element at the input and the T-matching network at output terminal. From the analysis results the T-matching network of cascode low noise amplifier (LNA) produced gain of 19.52 dB and noise figure (NF) of 1.01 dB. The input reflection (S_{11}) and output return loss (S_{22}) are -14.73 dB and -12.07 dB respectively. The bandwidth of the amplifier recorded is 1.5GHz. The input sensitivity is compliant with the IEEE 802.16 standards.

Keyword- Cascode LNA, Radio Frequency, Matching Network

I. INTRODUCTION

Today telecommunications industry continues to implement new technologies in an effort to provide high bandwidth, high-speed data transmission capabilities to the consumer. In the end, a combination of sophisticated wire line, fiber-optic and wireless technologies will most likely be deployed by this industry to satisfy consumer demand. During the last three decades, there has been an accelerating rate of convergence of computer data transmission and classic electronic communications that we now tend to use the term telecommunication to describe. Wireless communications has rapidly becoming one of the fastest growing segments of the communication industry. One of the reason is due to the fact that wireless communications has the potential to offer high-speed and quality communication between portable devices located anywhere in the world. Among the example of potential applications enabled by this technology are multimedia internet-enabled cell phones, smart homes and appliances, automated highway systems, video teleconferencing and distance learning. In the recent years, the wireless communication system become the main type of communication in the world. The field of Radio Frequency (RF) design is a growing one as a result of increased demand for wireless products. A microwave amplifier is one of RF system that becomes the most important part and extremely advanced with the involvement of microwave active and passive circuits [1]. The design of the front-end low noise amplifier (LNA) is one of the challenges in radio frequency (RF) receivers, which needs to provide good input impedance match, enough power gain and low noise figure (NF) within the required band [2],[8].Many high gain amplifier topologies have been proposed as a way to satisfy the requirement for low power dissipation as well as good performances. The cascode techniques to produces results in a higher bandwidth and gain, due to the increase in the output impedance, as well as better isolation between the input and output ports [3],[7].

II. THEORETICAL ASPECTS

Basically, it is important to design an amplifier that fulfills minimum noise figure and maximum gain at the same time. The input and output matching network are consider to achieve the required stability, small signal gain, and bandwidth. Super high frequency amplifier is a typical active circuit used to amplify the amplitude of RF signal. Basic concept and consideration in design of super high frequency amplifier is presented in this paper. The LNA designed, the formula and equation were referred to [4]. Figure 1, shows a typical single-stage amplifier including input/output matching networks. The basic concept of high frequency amplifier design is to match input/output of a transistor at high frequencies using S-parameters frequency characteristics at a specific DC-bias point with source impedance and load impedance. Input/output matching circuit is essential to reduce the unwanted reflection of signal and to improve efficiency of the transmission from source to load [4], [5].

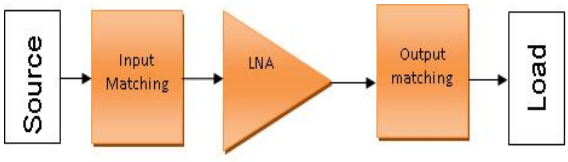

Figure 1: Typical amplifier design

A. Power Gain

Several power gains were defined in order to understand operation of super high frequency amplifier. Figure 2, show that power gains of 2-port circuit network with power impedance or load impedance at power amplifier. The power amplifiers represented with scattering coefficients are classified

into Operating Power Gain, Transducer Power Gain and Available Power Gain [4],[5].

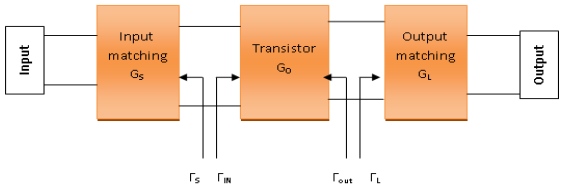

Figure 2: I/O circuit of 2-port network

B. Operating Power Gain

Operating power gain is the ratio of load power (P_L) delivered to the load (Z_L) to input power (P_{in}) supplied to 2-port network. Power delivered to the load is the difference between the power reflected at the output port and the input power, and power supplied to 2-port network is the difference between the input power at the input port and the reflected power. Therefore, Operating Power Gain is represented by

$$G_P = \frac{Power\ \ delivered\ \ to\ \ the\ \ load}{power\ \ supplied\ \ to\ \ the\ \ amplifier} = \frac{P_L}{P_{in}} = \frac{1}{1-|\Gamma_{in}|^2}|S_{21}|^2\frac{1-|\Gamma_L|^2}{|1-S_{22}\Gamma_L|^2} \quad (1)$$

Where, Γ_{in} indicates reflection coefficient of load at the input port of 2-port network and Γ_s is reflection coefficient of power supplied to the input port.

C. Transducer Power Gain

Transducer Power Gain is the ratio of P_{avs}, maximum power available from source to P_L, power delivered to the load. As maximum power is obtained when input impedance of circuit network is equal to conjugate complex number of power impedance, if $\Gamma_{in} = \Gamma_s$, transducer power gain is represented by

$$G_T = \frac{Power\ \ delivered\ \ to\ the\ \ load}{Power\ Available\ from the\ source} = \frac{P_L}{P_{avs}} = \frac{|S_{21}|^2(1-|\Gamma_S|^2)(1-|\Gamma_L|^2)}{|(1-S_{11}\Gamma_S)(1-S_{22}\Gamma_L)-(S_{12}S_{21}\Gamma_S\Gamma_L)|^2} \quad (2)$$

Where, Γ_L indicates load reflection coefficient.

D. Available Power Gain

Available Power Gain, G_A is the ratio of P_{avs}, power available from the source, to P_{avn}, power available from 2-port network, that is, $G_A = \frac{P_{avn}}{P_{avs}}$. Power gain is P_{avn} when $\Gamma_{in} = \Gamma^*_s$. Therefore Available Power Gain is given by:

$$G_A = \frac{Power\ \ available\ \ from\ \ the\ \ amplifier}{Power\ \ available\ \ from\ \ the\ source} = \frac{P_{avn}}{P_{avs}} = \frac{1-|\Gamma_S|^2}{|1-S_{11}\Gamma_S|^2}|S_{21}|^2\frac{1}{|1-S_{22}\Gamma_L|^2} \quad (3)$$

That is, the above formula indicates power gain when input and output are matched [5].

E. Noise Figure

Signals and noises applied to the input port of amplifier were amplified by the gain of the amplifier and noise of amplifier itself is added to the output. Therefore, SNR (Signal to Noise Ratio) of the output port is smaller than that of the input port. The ratio of SNR of input port to that of output port is referred to as noise figure and is larger than 1 dB. Typically, noise figure of 2-port transistor has a minimum value at the specified admittance given by formula:

$$F = F_{\min} + \frac{R_N}{G_S}|Y_s - Y_{opt}|^2 \quad (4)$$

Where, R_N is the equivalent noise resistance of two ports. F_{min} is the minimum noise factor obtained by adjusting tuners at the input of the amplifier. The normalized presented by the tuners at F_{min} is Y_{opt}. With $Y_s = Y_s/Z_o$ being the actual normalized admittance.

For low noise transistors, manufactures usually provide $F_{\min}, R_N, Y_{opt}$ by frequencies. N defined by formula for desired noise figure:

$$N = \frac{|\Gamma_s - \Gamma_{opt}|^2}{1-|\Gamma_S|^2} = \frac{F - F_{\min}}{4R_N/Z_0}|1+\Gamma_{opt}|^2 \quad (5)$$

F. Condition for Matching

The scattering coefficients of transistor were determined. The only flexibility permitted to the designer is the input/output matching circuit. The input circuit should match to the source and the output circuit should match to the load in order to deliver maximum power to the load. After stability of active device is demand, input/output matching circuits should be designed so that reflection coefficient of each port is correlated with conjugate complex number as given below [6]:

$$\Gamma_{IN} = \Gamma_S^* = S_{11} + \frac{S_{12}S_{21}\Gamma_L}{1-S_{22}\Gamma_L} \quad (6)$$

$$\Gamma_{OUT} = \Gamma_L^* = S_{22} + \frac{S_{12}S_{21}\Gamma_S}{1-S_{11}\Gamma_S} \quad (7)$$

The noise figure of the first stage of the receiver overrules noise figure of the whole system. To get a minimum noise figure using a transistor, power reflection coefficient should match with Γ_{opt} and load reflection coefficient should match with Γ_{out}^{*}

$$\Gamma_s = \Gamma_{opt} \tag{8}$$

$$\Gamma_L = \Gamma_{out}^{*} = \left(S_{22} + \frac{S_{12}S_{21}\Gamma_s}{1 - S_{11}\Gamma_s} \right) \tag{9}$$

III. DESIGN OF LNA

The Figure 3(a), 3(b), 3(c) and 3(d) are four types of the matching network for input matching network port, while Figure 4 shows the T- matching network uses at the output port respectively to provider the good performance in term of stability, power gain and S-Parameter.

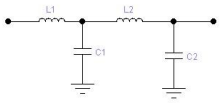

Figure 3(a): Ladder matching

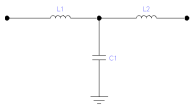

Figure 3(b): T-Matching

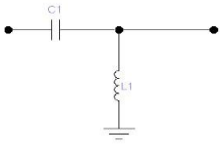

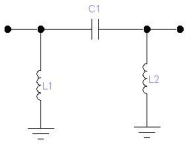

Figure 3(c): L-Matching **Figure 3(d): Pie-Matching**

Figure 3: Matching networks for input

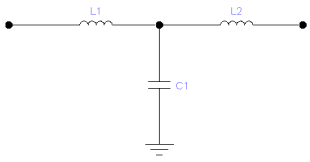

Figure 4 : T-Matching network for Output

The goals in LNA design are to maximize its gain and minimize its noise figure with sufficient linearity and impedance matching [1]. In order to achieved the key demands for WiMAX receiver characteristics, a LNA is designed should be met are the noise figure less than 3 dB and power gain should be more than 20 dB. Also good input and output impedance matching to achieved the s-parameter values.

Figure 5(a) shows, the complete schematic circuit of 5.8 GHz a Cascode Low noise amplifier. It was simulated using the same software to fine and further optimized for a better performance. For purpose of fabrication, the inductances and capacitances need to be converted to microstrip layout. Figure 5(b) shows, the complete schematic layout. The Duriod 5880 TYL-0200 was selected for fabricate. The LNA parameter is shown in Table I.

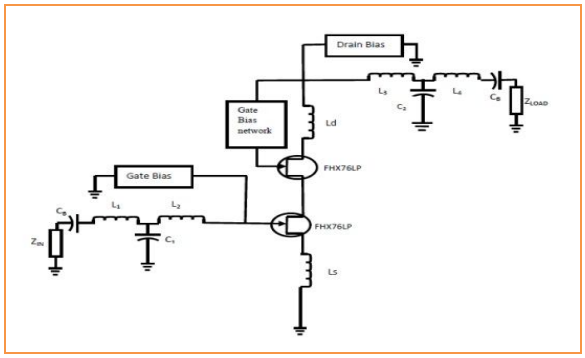

Figure 5(a): The Schematic Circuit for Cascode LNA

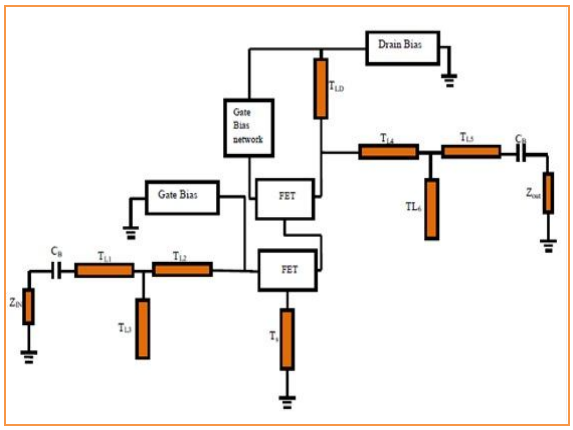

Figure 5(b): The Schematic Layout for Cascode LNA

Table I: LNA Parameters

Component	Width (mm)	Length (mm)
TL_1=3.24nH	W = 1.554	L=15.25
TL_2=1.23nH	W = 1.554	L=6.07
TL_3=0.40pF	W = 1.554	L=12.44
TL_3=0.24pF	W = 1.554	L=10.44
TL_4=1.55nH	W = 1.554	L=7.64
TL_5=1.62nH	W = 1.554	L=7.98
TL_6=0.43pF	W = 1.554	L=18.95

IV. SIMULATION RESULT

Table II shows the s-parameters output of Cascode LNA. It is simulated using Advanced Design System (ADS). The simulation recorded that the power gains S_{21} is 19.5 dB. The input return loss S_{11} is -18.9 dB, overall noise figure (NF) of 1.2 dB and the output return loss S_{22} is -20 dB.The reflection losses S_{12} is -22.1 dB. These values were within the design specification and were accepted.

The outputs S-parameter are shows in Figure 6a and 6b.Figure 6a shows the input and output return loss. Figure 6b show the noise figure and the stability.

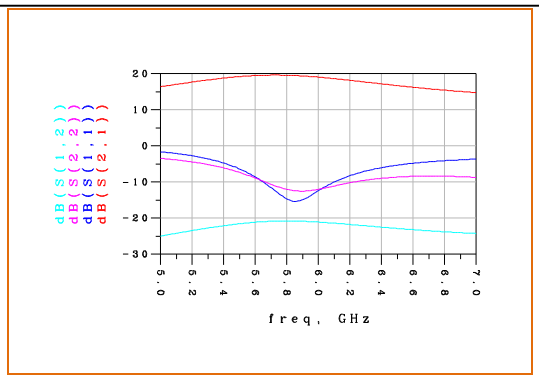

Figure 6(a): S_{22} and S_{11}

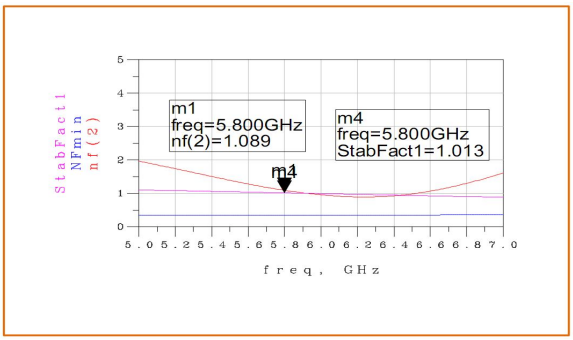

Figure 6(b): Noise Figure and stability factor (k)

Table II: Simulation Results

M-Network / S-Parameters(dB)	L	T	Pi	Ladder
Input Reflection S_{11}	18.60	-4.73	14.26	-15.30
Return Loss S_{12}	-23.09	-20.85	-21.70	-21.46
Forward Transfer S_{21}	18.60	19.52	19.43	19.23
Output Reflection S_{22}	-10.2	-12.07	-14.5	-13.7
Noise Figure NF	1.03	1.089	1.162	1.03
Bandwidth (GHz)	1.28	1.5	1.5	1.5
Stability Factor (K)	1.01	1.013	1.016	1.013

CONCLUSION

The cascoded low noise amplifier with four types of matching techniques has been simulated and designed. It's observed to compliant with IEEE standard 802.16 WiMAX applications. It is observed that the simulated and targeted results giving almost the same figure as required. It observed that the higher gain simulated is 19.52 dB. It is important to take note when designing the amplifier to match the amplifier circuits.

The 5.8 GHz LNA has been developed successfully and the circuit contributed to the front end receiver at the described frequency. For better performance in gain of the amplifier, it can be achieved by increasing the number of stages to improve the gain and noise figure of the design [9]. Higher gain would expand the coverage or communication distance.

REFERENCES

[1] Jelana Misic. " Wideband Low Noise Amplifier for Long Term Evolution Systems ". Proceeding of the 5th Systems Simulation Symposium 2014.

[2] Ruey-Lue Wang, Shih-Chih Chen,Cheng-Lin Huang,Chien-Hsuan Lie,Yi-Shu Lin. "2-6GHz Current-Reused LNA With Transformer-type Inductors." IEEE Proceeding 2008.

[3] Leon, Michael Angelo G.Lorenzo and Maria Theresa G.De. "Comparison of LNA Topology for Wimax Application in a Standard 90-nm CMOS Process." 12th International Conference on Computer Modelling and Simulation. 2010. pp-642-647.

[4] M.Pozar, David. Microwave and RF Wireless System. Third Avenue,N.Y.John Wiley & Sons, in 2001.

[5] Gonzalez, Guillermo. Microwave Transistor Amplifier. 1996.

[6] Othman A.R, Hamidon A.H,Ting J.T.H and Mustaffa M.F. "High Gain Cascaded Low Noise Amplifier Using T-Matching Network." 4th ISBC 2010.

[7] Weber, Wuezhan Wang and Robert. "Design of a CMOS Low Noise Amplifier (LNA) at 5.8GHz and its Sensitivity Analysis." 11th NASA Symposium 2003.

[8] IEEE Computer Society and IEEE Microwave Theory Technique and Society. Part 16 Air Interface For Fix Broadband Wireless System, IEEE Standard 802.16.2004.

[9] Inder J.Bahl. Fundamentals of RF and Microwave Transistor Amplifier. 2009

★★★