IMPLEMENTATION OF TRAJECTORY TRACKING CONTROL OF A DIFFERENTIAL DRIVE WHEELED MOBILE ROBOT

[1]MEMEKO, [2]KYAWTHIHA, [3]SWESWEWIN

[1, 2, 3]Mechatronic Engineering Department, Mandalay Technological University, Myanmar
Email: [1]myatthinzarkoycc@gmail.com, [2]kthihacn@gmail.com, [3]sswinn22@gmail.com

Abstract - The aim of this research is to accurately track the desired trajectories from a differential drive wheeled mobile robot using fuzzy logic controller. The trajectories such as straight line, goal point, circle and ellipsewas created in MATLAB Simulink block. The difference between the desired position and the current position is used as the input of the fuzzy controller to control the motion of the mobile robot. A motion control structure with a fuzzy controller is proposed to determine velocities of themobile robot. According to the movement timing of the robot, moving forward and trajectory tracking consideration is setup based on the difference of current and torque. The performance of robot path travelled is recorded and implemented using time delay for each steps and PWM (pulse width modulation). These values are sent to PIC16F887 microcontroller and reading data are used as input of motor driver. Left and right DC motors encoders are read and run the motors with motor driver. And then, mobile robot tracks the straight line, goal point, circleand ellipse shape trajectory as the Simulation data in real world with less error.

Keywords - Trajectory Tracking, Mobile Robot, Fuzzy controller, PIC16F887, DC Motor.

I. INTRODUCTION

An autonomous mobile robot is an intelligent robot that performs a given work with sensors by identifying the surrounded environment and reacts to the condition by itself instead of human. Many studies about autonomous navigation applied to non-holonomic robots focused on the design of a global analytic trajectory, composed of straight segments connected with either tangential circular or symmetric arcs [1]. In the trajectory tracking control, the desired trajectory required by mobile robot is given in graph based on the time relation. Many control strategies such as optimum control, robust control, sliding mode control, intelligent control, back-stepping control, fuzzy logic control, and so on, are considered with kinematic models.

Although these methods have been proven to be efficient and provide good short term position estimates, they suffer from unbounded error growth due to the integration of minute measurements to obtain the final estimate [2]. In fact, there is a high demand for mobile robots to use in hard to reach and hazardous areas [3]. This approach involves two steps: first planning a feasible trajectory and second designing a control algorithm to follow this trajectory [4]. This method has a drawback the lack of reactivity. For more reactive navigation, kinematic constraints have been introduced in the spatial representation [5]. In this research, fuzzy logic controller is used to be robust the trajectory tracking control system.

The rest of this paper is organized as follows: Section 2 describes system overview of trajectory tracking control system. System operation of the mobile robot is described in section 3. The experimental results of the system are illustrated in Section 4. And then conclusion is explained in Section 5.

II. SYSTEM OVERVIEW

The coordinates of the vehicle is q = (x, y, θ), and (x, y) are the position of the wheels (m), and θ is the orientation (heading) of the wheels (rad).The kinematics models of the mobile robot equation are based on the unicycle equation.

$\dot{x} = V\cos\theta$ (1)

$\dot{y} = V\sin\theta$ (2)

$\dot{\theta} = \omega$ (3)

Where, V is the linear velocity (m/sec) and ω is angular velocity (rad/sec).

Fig.1 shows the overall block diagram of mobile robot trajectory tracking control.

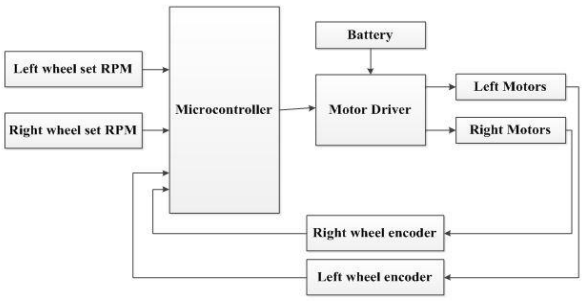

Fig.1. Overall block diagram of mobile robot trajectory tracking control

The following equations were used to find the linear velocity and angular velocities.

$V = \frac{v_l + v_r}{2}$ (4)

$\omega = \frac{v_l - v_r}{D}$ (5)

Left and right wheel linear velocities (m/sec) are shown in following;

$$v_r = \frac{2v + \omega l}{2R} \quad (6)$$

$$v_l = \frac{2v - \omega l}{2R}$$

Where, r is radius of the wheels, v_r and v_l are right and left wheel linear velocities, R is the radius of the wheels and the distance between the wheels is D. Error position and orientation can be estimated as follow:

$$E_p = \sqrt{(x_g - x)^2 + (y_g - y)^2} \quad (7)$$

$$\theta_g = \theta_{goal} = \arctan2\left(\frac{y_g - y}{x_g - x}\right) \quad (8)$$

Error orientation, $e = \theta_g - \theta$

Corrected error, E_θ= arctan2 (sin (e), cos(e))

The kinematic model equation of the mobile robot is given by:

$$\dot{q} = \begin{pmatrix} \dot{x} \\ \dot{y} \\ \dot{\theta} \end{pmatrix} = \begin{pmatrix} \cos\theta & 0 \\ \sin\theta & 0 \\ 0 & 1 \end{pmatrix} \begin{pmatrix} v \\ \omega \end{pmatrix} \quad (9)$$

2.1 Constructing Fuzzy Logic Controller

Five membership functions are considered with all are of triangular member. The languages are Zero (Z), Positive Small (PS), Positive Medium (PM), Positive Big (PB), Very Positive Big (VPB) for position and velocity. For orientation and heading angle, Negative Big (NB), Negative Small (NS), Zero (Z), Positive Small (PS), Positive Big (PB) are assigned.

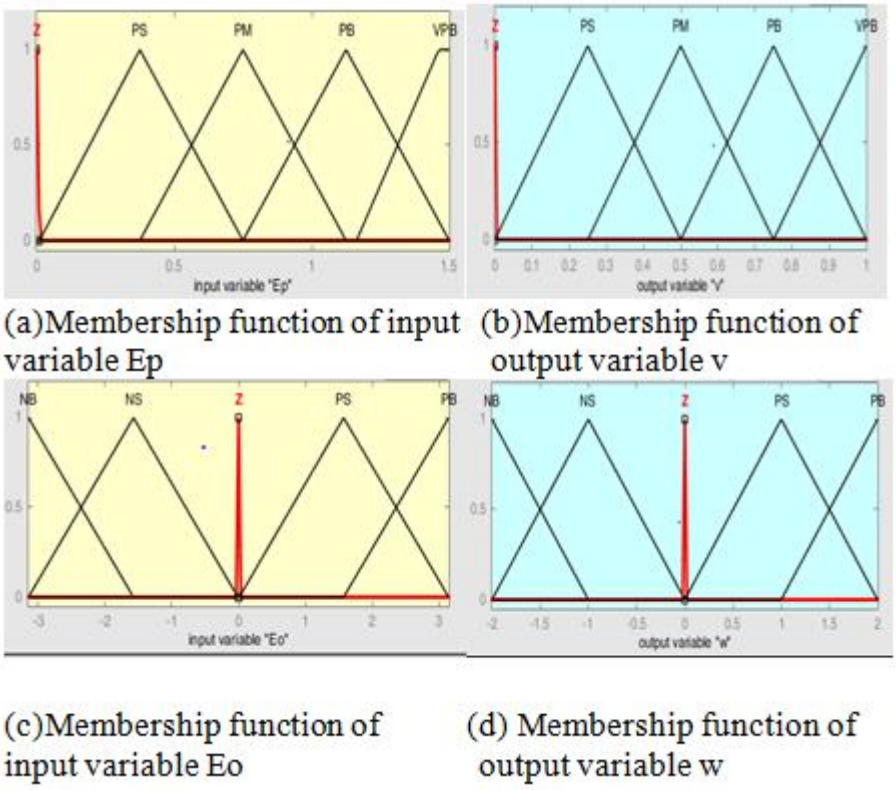

(a)Membership function of input variable Ep

(b)Membership function of output variable v

(c)Membership function of input variable Eo

(d) Membership function of output variable w

Fig.2. Membership functions

The membership functions of inputs and outputs are shown in Fig.2, where $0 \leq$ Ep(error position) ≤ 1.5 (m);-pi $\leq$ Eo (error orientation) $\leq$ pi (deg);$0 \leq$ v(position) ≤ 1 (m/s); $-2 \leq$ w (position) ≤ 2 (rad/s).The centroid method is used to defuzzify the output variable..The expert system is developed based on the IF- THEN rules as 25 rules to control robot tracking defined trajectory.

2.2 Components of mobile robot

The trajectory tracking of mobile robot control system is constructed with switch, motor driver, microcontroller, 12V battery and DC gear motors.The components of mobile robot are two DC gear motor with encoder, one caster wheel,VNH2SP30 Motor Driver, 12V battery and PIC16F887 microcontroller. DC gear motor reduction ratio is 1:45 gearbox and revolution of 12 pulses per revolution of the motor shaft. Motor drivercan control the motors to drive the mobile robot as defined trajectory. In this research, RB0 and RB1 pins of PIC16F887 were used for right motors to rotate forward and track the trajectory. RB2 and RB3 pins were used for left motors. For pulse width modulation (PWM), RC1 and RC2 pins were used to control the motors.

2.3 Transferring data from MATLAB to controller

The set rpm values from workspacewere taken and put them into the controller of mobile robot. Controller evaluated the PWM duty cycle percent with motor driver circuit. The following steps were evaluated to be rpm values. Sampling time can be calculated from oscillator frequency (20MHz). The encoder periods (sec) were read and multiply with 12 counts per revolution. This value was reciprocal to

get the revolution per second. Revolution per second is changed to be revolution per minute by multiplying with 60. To get motor shaft rpm by dividing with gear box ratio.

III. SYSTEM OPERATION

The working system flow chart of the mobile robot trajectory tracking control system is illustrated in Fig.3.

As soon as the program started, left and right wheel set rpm values were defined to upgrade the new ones per second. And then, left and right motor encoder values were read and current rpm values are calculated. Left and right error rpm were determined the difference values between set rpm and current rpm.These error rpm were put into fuzzy controller and they evaluated the pulse width modulation (PWM) duty cycle percent. After calibrating these values, left and right motors were driven to track the mobile robot as defined trajectory. LCD displays left and right set rpm, current rpm and duty cycle percent while driving the mobile robot.

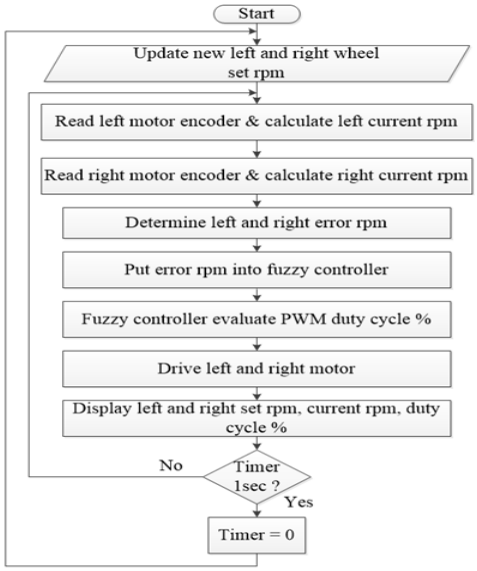

Fig.3. Flow chart of mobile robot trajectory tracking control system

IV. EXPERIMENTAL RESULTS

4.1 Simulation Experiment

For testing the performance of the operation, the following MATLAB simulation was applied. Fig.4 shows the circle trajectory tracking of mobile robot from start point (0.5, 0, 90) to(x=0.5 m, y=0.5 m).

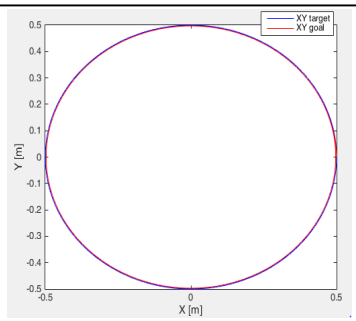

Fig.4. Desired circle trajectory tracking of mobile robot

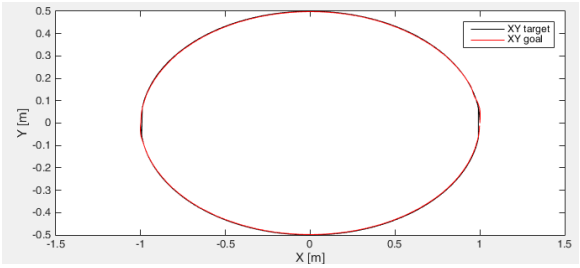

Fig.5. Desired ellipse trajectory tracking of mobile robot

Fig.5 shows the ellipse trajectory tracking of mobile robot from start point (1, 0, 90) to (x=2 m, y=1 m).

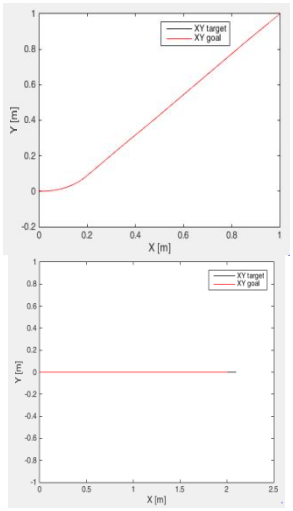

Fig.6.Desired goal point and straight line trajectories tracking of mobile robot

Fig.6 shows the goal point (x=1 m, y=1 m) trajectories and straight line (x=2 m) trajectories from start point (0, 0, 0) respectively.

Simulink block diagram of unicycle is shown inFig.7.

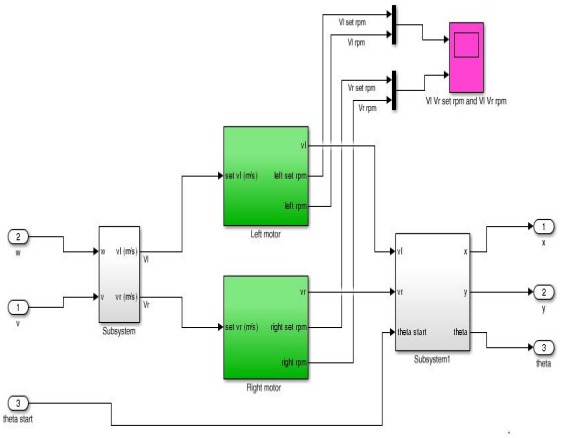

Fig.7.Simulink block diagram of unicycle

The specifications of motor transfer function that used in this research are shown in Table 1.The motors received the data from microcontroller to control them via motor driver module. The mobile robot can be controlled as the set points of RPM values.

Table 1:The specifications of motor transfer function

Types	Symbol	Values	Units
Resistance	R	6	Ohm (Ω)
Inductance	L	0.001	Henry(H)
Gear Motor Inertia	J	0.00004	$Kg.m^2$
Viscous damping	b	0.0002	Nm/s
Back EMF constant	K_b	0.0175	V/(rad/s)
Torque constant	K_t	0.329	Nm/A

Left and right motor transfer function is shown in Fig.8.

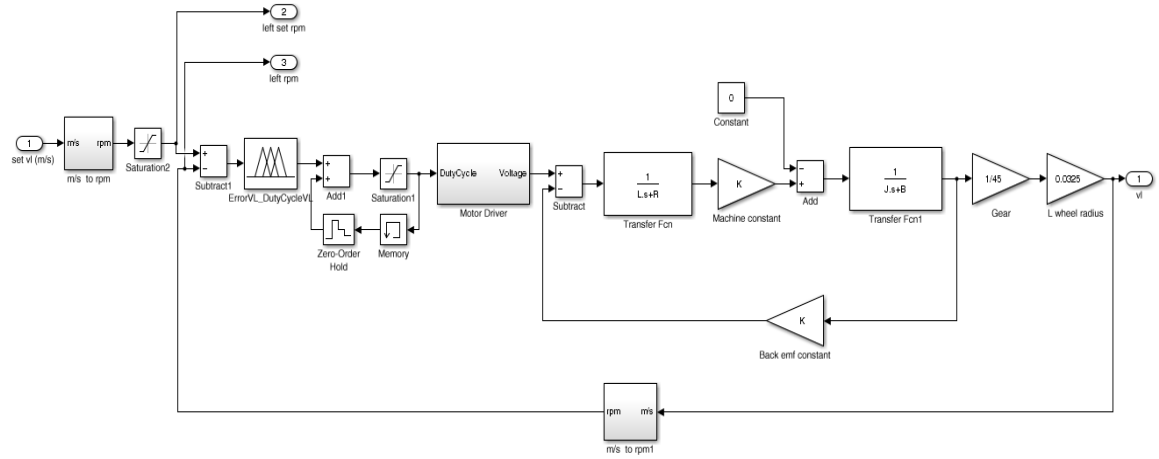

Fig.8. Simulink block diagram of the motor transfer function

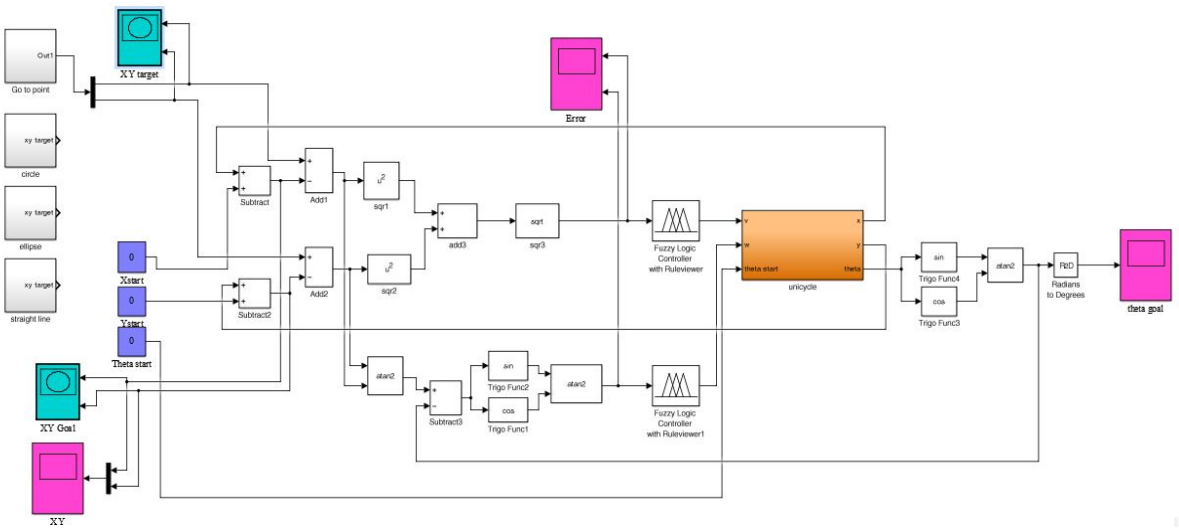

Fig.9. Simulink block diagram of the various trajectories tracking control system

Fig.9 shows the Simulink block diagram of the various trajectories tracking such as straight line, goal point, circle and ellipse.

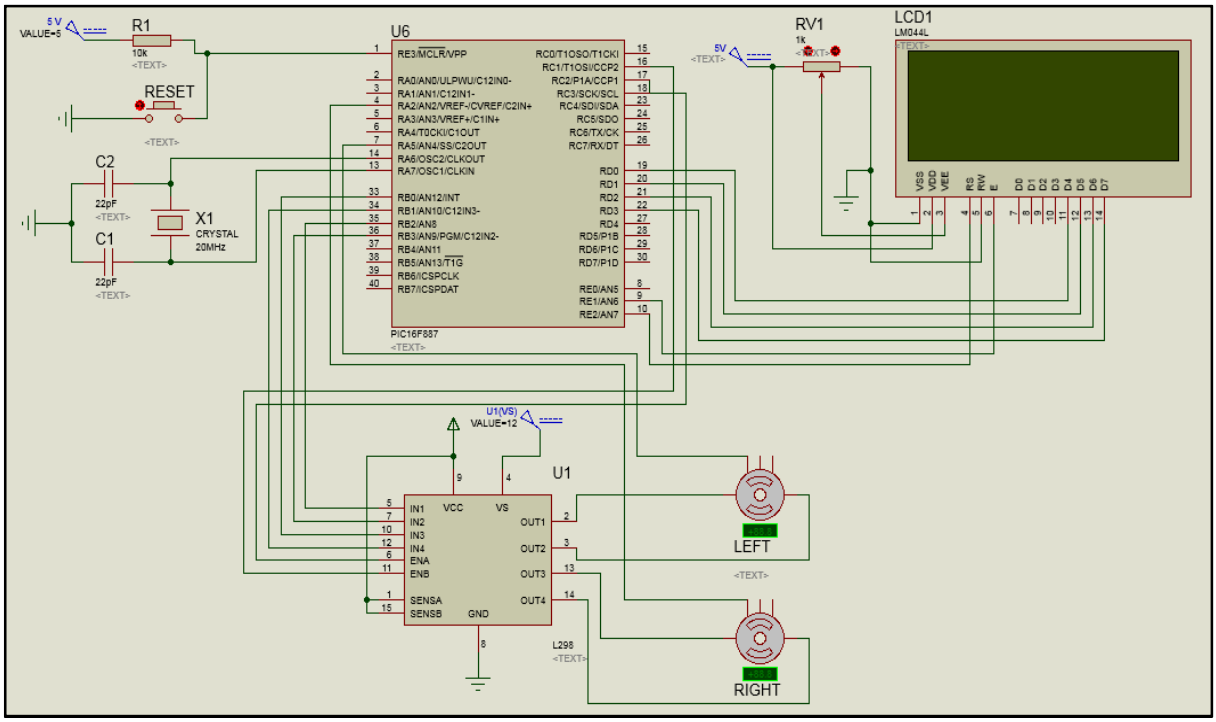

Fig.10. Circuit diagram of the various trajectories tracking control system

4.2 Hardware Experiment

Fig.10 shows the circuit diagram of the various trajectoriestracking.Fig.11 shows the hardware implementation of mobile robot.

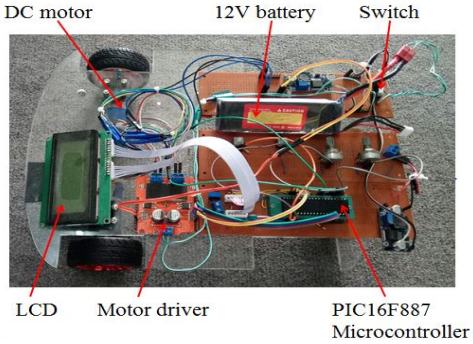

Fig.11. Mobile robot

In Fig.12, testing the circle trajectory tracking with radius 0.5m is shown.

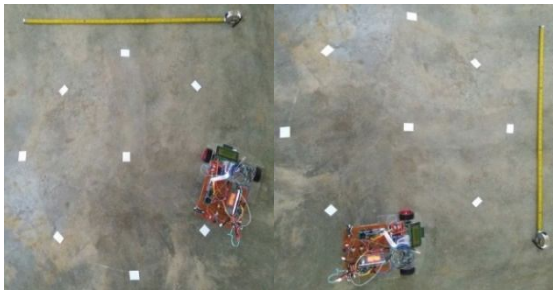

Fig.12. Testing 0.5m radius circle trajectory tracking

Fig.13 shows the testing x=2m and y=1 m ellipse trajectory tracking. Testing goal point trajectory tracking x=1m and y=1m is shown in Fig.14.

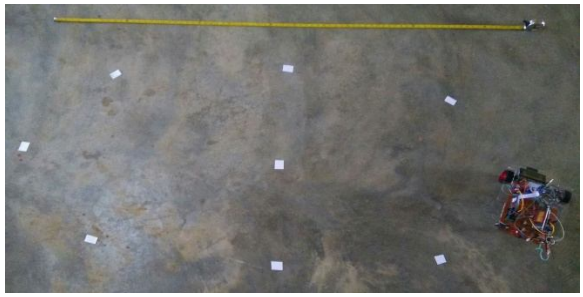

Fig.13.Testing x=2m, y=1m ellipse trajectory tracking

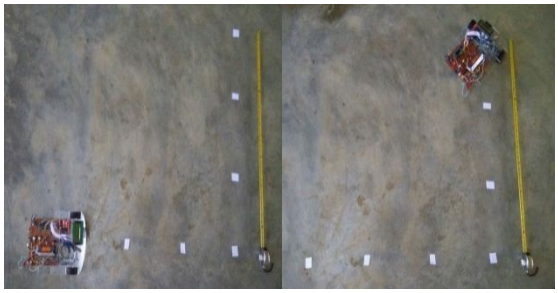

Fig.14. Testing x=1m, y=1m goal point trajectory tracking

Straight line 2m distance is tested in Figure15.

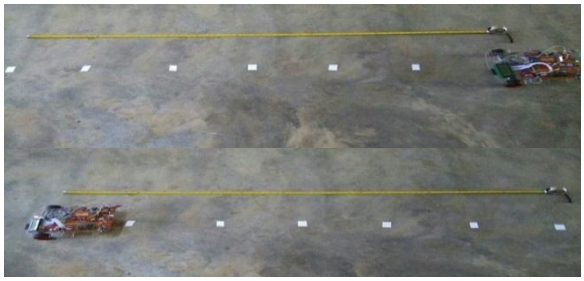

Fig.15. Testing 2m straight line trajectory tracking

Circle trajectory tracking reach x=0.5m and y=0.5m within 16sec, ellipse trajectory tracking reach x=1m and y=0.5m within 21sec, goal point trajectory tracking reach x=1m and y=1 m, straight line 2 m trajectory tracking reach within 5sec.

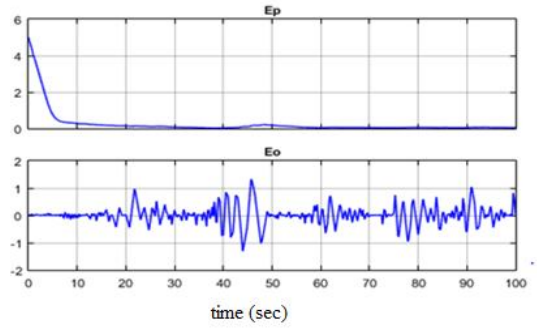

Fig.16. Error position and orientation of circle trajectory

The error position and orientation of circle trajectory tracking is shown in Figure 16. For circle trajectory, error position is slightly smooth but error orientation curve is fluctuating.

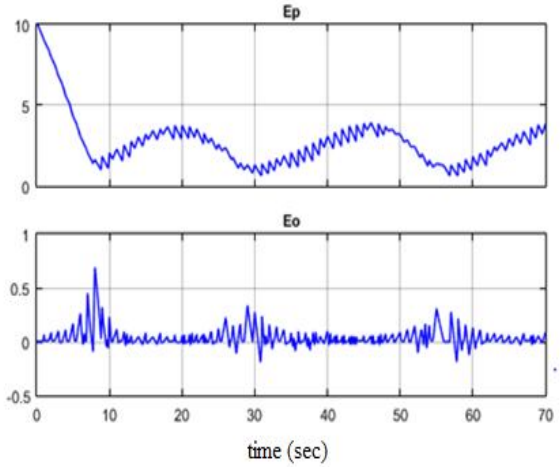

Fig.17. Error position and orientation of ellipse trajectory

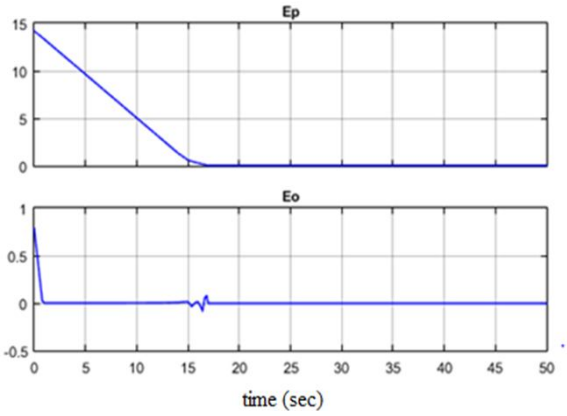

Fig.18. Error position and orientation of goal point trajectory

The error position and orientation of ellipse trajectory tracking is shown in Fig.17.Theerror position of ellipse trajectory is rather fluctuating because tracking through the mobile robot is more angular position than others. In straight line and goal point trajectories, the error position and orientation are smooth and can reach the target with less error. Their error position and orientation are shown in Fig.18 and 19.

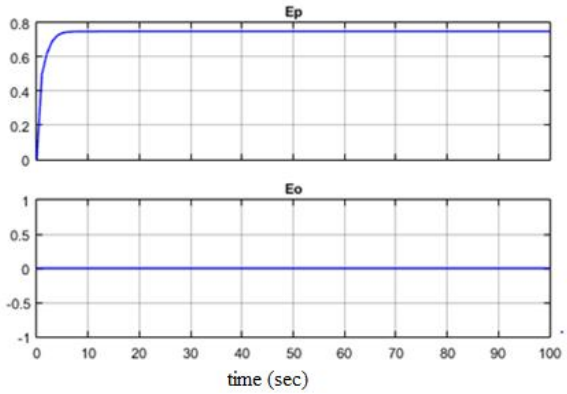

Fig.19. Error position and orientation of straight line trajectory

CONCLUSION

A mobile robot which can automatically track the trajectories was designed by using the fuzzy logic controller in this research. There were the small amounts of errors for all tests. In the tests of circle and ellipse trajectories, there were more amounts of errors compared with other tests because the mobile robot needs to turn more angular position than others. In future, the errors of position and orientation values for trajectory tracking system should be smooth and the tracking time are as less as possible with the minimum of error.

ACKNOWLEDGMENTS

Firstly, I would like to acknowledge particular thanks to Dr. Sint Soe, Rector of Mandalay Technological University, for his kind permission to carry out this research. I would like to thank Dr. Wutyi Win (Professor and Head) and my supervisor, Dr. Kyaw Thiha (Professor)who have helped me throughout the year. Without their continued support and interest, this research would not have been the same as present here. And I also would like to thank all the teachers from the Department of Mechatronic Engineering, Mandalay Technological University (MTU).And I also would like to thank my family and my friends who have helped her throughout the year.

REFERENCES

[1] Fraichard, T. &Garnier, P. (2001). Fuzzy control to drive car like vehicles. Robotics and Autonomous Systems, 34(1),1-22.

[2] K. S. Chong and L. Kleeman, "Accurate odometry and error modelling for a mobile robot," in Proceedings of the IEEE International Conference on Robotics and Automation (ICRA '97), pp. 2783–2788, April 1997. View at Scopus.

[3] LEE T H, LAM H K, Leung F H F and Tam P K S, A practicalfuzzy logic controller for the path tracking of

wheeled mobile robots, IEEE Control Syst Mag, 23 (2003) 60-65.

[4] Manikonda, V: Hendler, J. A. &Krishnaprasal, P.S., "Formalization behavior-based planning for nonholonomic robots", in Proc International Conference on Artificial Intelligence, pp.142-149.

[5]]Shuli S, Designing approach on trajectory tracking control of mobile robot, Robotics Computer-Integrated Manuf, 21 (2005), 82-85.

[6] Me MeKo, KyawThiha, Trajectory Tracking Control of a Differential Drive Wheeled Mobile Robot using Fuzzy logic Controller, The Eighth International Conference on Science and Engineering (ICSE), Yangon, Myanmar, December 9-10, 2017.

★★★