DEVELOPMENT OF PULSE OXIMETER BY USING 32-BIT ARM BASED MICROCONTROLLER

[1]WALEED MOHMOOD ABDULLAH, [2]ERGUN ERCELEBI

[1,2]Department of Electric and Electronic Engineering, Gaziantep University, Turkey
E-mail: [1]waleed8532@gmail.com, [2]ercelebi@gantep.edu.tr

Abstract- Pulse oximeteris the medical device that canmeasure the oxygenated percentage inpatient's blood hemoglobin, which isnoninvasive, simple and efficient method to measure the oxygen situation that transported from the heartto different body organs. The use of pulse oximeterhas been continuously increasing due to it can be utilized at several measurement sites such as the chest, wrists, forehead, and feet.This study is aimed to design pulse oximeter, which is can be used in real monitoring of human health. Thus, this study takes into consideration to check the best method that can be achieved a good accuracy that will give dependable results for both heart rate and SPO2 that can make the using of the proposed oximeter being practiced. For this purpose, we have checked several MCU based ARM cortex 32bit and different sensors and method beside compared it with the result taken from the common MUC result (Arduino UNIO). In follows the description of different methods and its results.

Keywords- Oximeter, ARMCortex, wearable device, heart rate.

I. INTRODUCTION

The pulse oximeter is a medical devicewhich can determineoxygen saturation and heart-rate as signatures of our health condition level. It can be used as a small device;thus, it has beaningused widely in several applications. The pulse oximeter measures the oxygen saturation as noninvasive and unremitting. This method generally allows for detect arterial hypoxemia. Some examples of pulse oximeter applications are the diagnosis of respiratory diseases and sleep apnea such as heart failure, pneumonia, asthma, chronic bronchitis, pulmonary edema, emphysema, congestive and chronic obstructive pulmonary disease.The measurement can take place by putting the well-perfuse tissues such asear-lobe or finger between the sensor that emitted the light source and light detector [1].

Pulse oximetry is easy to carry out; it just uses two different light sources for transmitting light and a photodiode for receiving light. Depending on the measurement position, either the reflective or the transmissive mode can be used. In the transmissive mode, the photodiode and the light sources are opposite to each other. In the reflective mode, the photodiode and light sources are on the same side, and light is reflected to the photodiode. Nowadays, the transmissivemethod is the common method used due to thestability andhighaccuracy. However, the requirement for reflective-mode oximetry is risingdue it doesn't need a thin measurement site, so it can be utilized at diverse measurement area such as the chest, wrists, forehead, andfeet. Particularly, if the need to used oximeter on wrist the reflective mode is the best selection to can be conveniently used as a band orwatch. Resent years, many oximetersbased reflectance pulse have been available commercially, but it used only for purposes of entertainment and monitoring of oxygen saturation [2]. In this study a wearable oximeter device has been designed and constructed then tested to determine the accuracy of it is operation.For hardware, the signal received from SpO2 sensor is processed via oximeter circuits to microcontroller to analyzed. In software part, the program has calculated the heart rate and the oxygen saturation value.

II. METHOLOGY

A. Oximeter Principles

The fundamental theory of pulse oximeter is based on the absorption coefficient variability of photons that pass through organic tissues at severalwavelengths. Because peopleshave caring quantity of oxygen saturation within blood, the specific wavelength region most be settled that is sensitive to the oxygen in blood. For human blood, the deoxygenated hemoglobin (deoxy-Hb) and the oxygenated hemoglobin (Hb) can be utilized for the purpose to measure the oxygen level in human blood. Human bloodis highly absorbers to the lightsof wavelength in range between 650 nm and 1000 nm (as shown in Fig.1) [3].

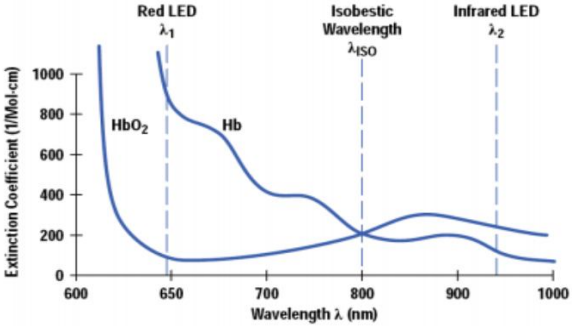

Figure 1. He absorption Spectrum for Oxy and Deoxy Hemoglobin [4]

In this range, the other human body layers, for instance fat and water, have a lower absorption coefficient when compared with deoxygenated hemoglobin and oxygenated hemoglobin. Additionally, the absorption of light of deoxy-Hb and Hb at the both wavelengths is different. In case the light is about 650nm wavelength (Red) is emitted to human blood, the deoxy-Hb absorbs light more than oxy. In case the wavelength is about 1000nm, the Hb will absorbing the more portion of photons. Therefore, the absorption ratio at the both wavelengths can be utilized for determines the level of oxygen saturation in the blood. [4]

B. Oximeter Structure

The general structure of anoximeter devised should includes the following parts: Oximetry probe, whichhastwo LEDs for transmiting light and sensor forreceiving thelight analog to digital convertor (ADC), signal, filtering, amplification, microcontroller, display screen and program manageoperations. The operation of the system is as follows: the reciver has received the most signal sent from the SpO2 sensor, (b) the low pass filterhas been used for filtering the noise (c) the high pass filter has been used to filtering the DC components, (d) the remain AC signalthen amplifying before sampled by the ADC, (e) AC signal is then converted to digital signal that is readable for the microcontroller via ADC, (f) SpO2 and heartrate has been calculedby program that embedded within the microcontroller, and (g) displaying the SpO2 value in LCD screen[5].

C. Oximetry probe Approaches

There are two sterategy for developing an oximetry probe. The first one is based on utlizedtransmitted light, the second is based on utlizedreflected light [6]. As shown in Fig.2.

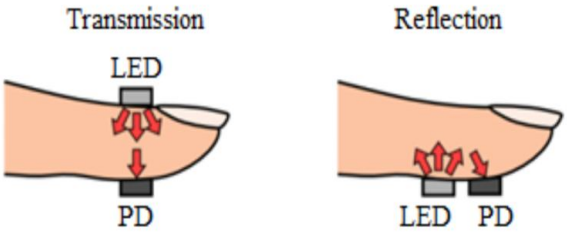

Figure 2. Transmission and reflection approaches for pulse oximetry [7]

The oximetry probe consisted from two parts transmiter and reciver, transmiter part is consisted from two LEDs and one light detector (photodiode). In transmitted light approch, the LEDs are in one side while the photodiode put on the other side. The tissue to be analyzed (commonly ear or finger) is put between the two. In other hand, the reflectance probe has the two LEDs and the photodiode which placed insame side. However, it should be placed over a point with underlying bone. The LEDs is emitted Light, which then passes through theblood vessels and tissue, it then reflected from the bone, and it passes through the tissues again, then recived byphotodiode. The probes uses reflectance method have the two main benfits that, the attachment site is always similar andregardless of the patient's size. Even so, the reflectance probe attachment , generaly, is more difficult than transmittance probe attachment, and the proper attachment of a reflectance probe is mainly to ensure the goodquality of thesignal. However, the properly attaching a reflectance probe is reltivaly time consuming that may lead to improper use. Both the reflectance and the transmittance probes has been used clinically, but the transmittance probe is proper than reflectance probe becouse of convenience of attachment, and the better quality ofsignal [7].

D. Calculation Of The Oxygen Level And Heart Beat Rate

The functional oxygen saturation (arterial oxy-hemoglobin saturation) that measuredbythe pulse oximeter (which also called SpO2), is the ratio of oxygenated Hemoglobin level (HbO_2) to the total Hemoglobin (oxygenated and depleted), that given by [8]:

$$S_pO_2 = \frac{HbO_2}{Hb+HbO_2} \quad (1)$$

WhereHbO_2,is an oxygenated hemoglobin, Hb,is the reduced oxgen hemoglobin.

The amount of light the passes through the tissuewhichcan be calculated by useBeer-Lambert Law as in follows [8]:

$$I_{out} = I_{in} \times e^{-A} \quad (2)$$

Oximeter probes has been designed to includes multiple light sources (or several colours of LEDs) that are switched on and off during the measurement by the device. By this method, the oxygen saturation and heart rate can be detected from two kinds of light i.e infrared (IR) and red . The signal from the both lights has AC and DC component. These component need to be measured from both wavelength and the equation that usedin calculation is given by [9]:

$$R = \frac{AC_{Red}/DC_{Red}}{AC_{IR}/DC_{IR}} \quad (3)$$

WhereR, is ratio between IRlight and red light. The S_pO_2 can be calculated from equation of calibration, which as in follows [9]:

$$S_pO_2 = 110 - 25R\% \quad (4)$$

The SpO_2 nomal value of person reading should be in the range of 95-100 [9].

The heart rate can be calculated by measure the elapsed time between IR signal peaks.The heart rate can be calculated by the followingequation [10].

$$H_R = \frac{60}{\text{period (sec)}} \quad (5)$$

Where, H_R, is the heart rate.

The heart beat is then measured by counting the number of samples.

III. PRPOSED OXIMETER STRUCTURE

As this study is aimed to design pulse oximeter which is can be uses in real monitoring of human health, this

study takes in consideration to check the best method that can be archive the good accuracy that give dependable result for both heart rate and SPO2 and can make use of the proposed oximeter be practically. For this purpose, we have checked several MCU based ARM cortex 32bit and different sensors and method beside compared it with result taken from common MUC result (Arduino UNIO). In follows the description of different methods and its results.

1- Wearable Oximeterbased Teensy 3.2 mini breakout MCU & MAX30100 Sensor

In this part we have study the use of small component in order to design wearable oximeter. The hardware component used are in follows:

E. **Teensy 3.2 mini breakout microcontroller:**

We have chosen the microcontroller-based ARM cortex 32bit, this because the ARM is one of the most licensed and thus widespread processor cores in the world used especially in portable devices due to reasonably good speed, low power consumption and reasonable performance (MIPS / watt). We have used Teensy 3.2 mini breakout microcontroller, a 32-bit ARM Cortex-M4 processor with 256KB flash, 32KB SRAM, and an operating speed of up to 48MHz. The benefit of used this microcontroller is the small size and have ARM cortex benefit.

F. **MAX30100 Sensor:**

It is an integrated pulse oximetry and heartrate monitor sensor solution. It combines two LEDs (660nm red and 880nm IR), a photodetector, optimized optics, and low-noise analog signal processing to detect pulse oximetry and heart-rate signals. The MAX30100 is an integrated pulse oximetry and heartrate monitor sensor solution. It combines two LEDs, a photodetector, optimized optics, and low-noise analog signal processing to detect pulse oximetry and heart-rate signals.

G. **The other electronic component:**

Includes some other component includes, (16x2) LCD to display the information such as heart rate or oxygen level directly to user. Two 4.7KΩ resistors and one 20 KΩ variable resistor, PCB board and wires. Figure 3 illustrated the circuit diagram of proposed system.

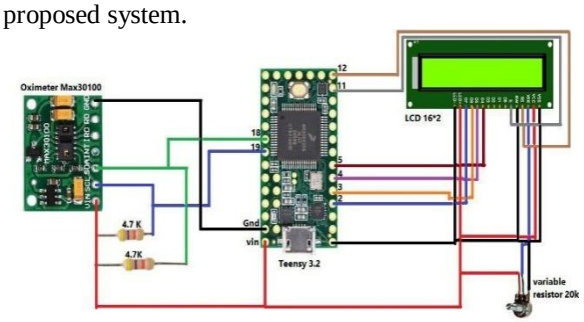

Figure 3. circuit diagram of wearable proposed system

For programing the microcontroller, we used C language and used Arduino IDE to write code and upload it to the microcontroller. The program has been designing to be simple to use, the program offers many options includes, heart rate, oxygen level, temperature.

2- PC Oximeter used a DAQ based Teensy 3.2 mini breakout MCU & MAX30100 Sensor

In this part we have used the proposed Oximeter in part 1 as DAQ system then interfaced it with program designed by used LabVIEW software. The reason of tested proposed system with PC is to check the operation with benefit of high speed operation stability and GUI.The DAQ has same component of proposed wearable oximeter, but it programed to interfaced with PC and LabVIEW via USB port. The MCU is gathering information from 30100 sensor and sending it to PC then to Oximeter Program to monitor the results. The block diagram of proposed oximeter in LabVIEW program and the GUI (graphic user interphase) are shown in figure 4 and 5 respectively.

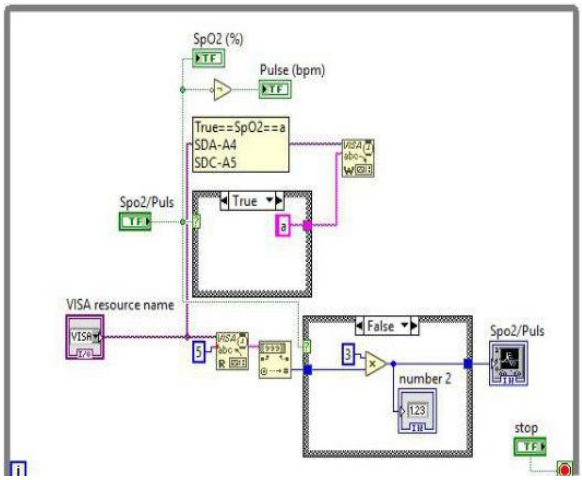

Figure 4. a block diagram of proposed oximeter in LabVIEW

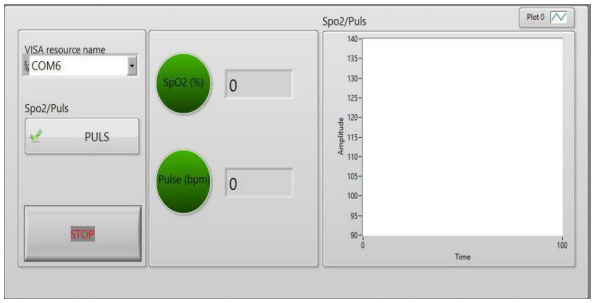

Figure 5. GUI of proposed oximeter

3- Wearable Oximeter based Teensy 3.2 mini breakout MCU & Proposed Sensor

In this part we have designed a wearable proposed oximeter with uses a proposed oximeter sensor. The proposed sensor is based on transmitted light strategy instead of used reflected light strategy that utilized by MAX30100. In transmitted light approach, the LEDs are in one side while the photodiodes put on the other side. The tissue to be analyzed (commonly ear or finger) is put between the two. In other hand, the reflectance probe has the two LEDs and the photodiode is placed in same side. The LEDs is

emitted Light, which then passes through the blood vessels and tissue, it then received by photodiode. Figure 6 shows the two strategies.

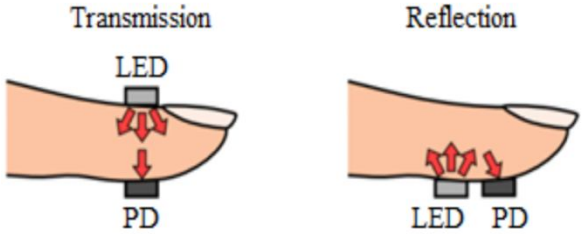

Figure 6. Transmission and reflection approaches for pulse oximetry

The prposed sensor consisted from two lED one visibe and one IR that put on board to be in one side (figure 6 (a)), while used two photodiode type "OPT101" to put on other side (figure 6(b)). The algorthim of calculating SPO2 is based on following equations:

$$R = \frac{AC_{Red}/DC_{Red}}{AC_{IR}/DC_{IR}} \quad (1)$$

$$R = \frac{\log AC_{Red}+DC_{Red}/DC_{Red}}{\log AC_{IR}+DC_{IR}/DC_{IR}} \quad (2)$$

The algorthim steps can be described in follows:

Oximeter Sensor Algorithm

Step 1: Start.
Step 2: Get analog values of receiving signals (IR+red) at photodiodes a=analogRead(A0); b=analogRead(A1);
Step 3: Compute SPO2 from equation 2, where SPO2=(log(a)/log(b)) x100
Step 4: Print value and show on screen.
Step 5: End

The proposed oximetersensor is shown in figure 7

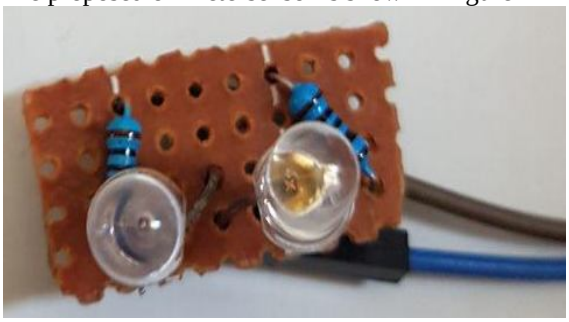

(a)

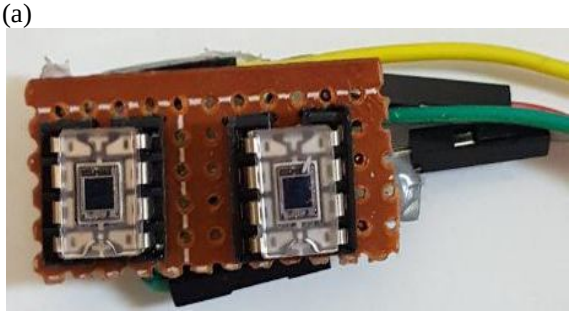

(b)

Figure 7. The prposed pulse oximetry sensor, (a) transmiter side (LED IR+RED), 9b0 Reciver side

In order to measure heart rate, we have used a pulse sensor model from pulse sensor.com as shown in figure 8.



Figure 8. Heart rate sensor from pulse sensor.com

4- Wearable Oximeter based ArduinoNanoMCU & MAX30100 Sensor

In this part we have study the use of Arduino Nano based ATmega328P to compered with Teensy MCU version 3.2 which utilized 32bit ARM cortex M4 processor for design wearable pulse oximeter. The hardware component used are in follows:

A. Arduino Nano 3.x microcontroller:

The Arduino Nano is a tiny, complete and breadboard-friendly board based on theATmega328. The Nano has everything that Diecimila/Duemilanove has (electrically) with more analog input pins and onboard +5V AREF jumper. Physically, it is missing power jack. It is automatically sensed and switched to the higher potential source of power so there is no need for the power select jumper. Nano's got the breadboard-ability of the Boarduino and the Mini+USB with smaller footprint than either, so users have more breadboard space. It's got a pin layout that works well with the Mini or the Basic Stamp (TX, RX, ATN, GND on one top, power and ground on the other).

The Nano specification includes: Microcontroller Atmel ATmega328 Operating Voltage (logic level) 5 V Input Voltage (recommended) 7-12 V Input Voltage (limits) 6-20 V Digital I/O Pins 14 (of which 6 provide PWM output) Analog Input Pins 8 DC Current per I/O Pin 40 mA Flash Memory 32 KB (of which 2KB used by bootloader) SRAM 2 KB EEPROM 1 KB Clock Speed 16 MHz Dimensions 0.70" x 1.70".

B. **MAX30100 Sensor:**

It is an integrated pulse oximetry and heartrate monitor sensor solution. It combines two LEDs (660nm red and 880nm IR), a photodetector, optimized optics, and low-noise analog signal processing to detect pulse oximetry and heart-rate signals. The MAX30100 is an integrated pulse oximetry and heartrate monitor sensor solution. It combines two LEDs, a photodetector, optimized

optics, and low-noise analog signal processing to detect pulse oximetry and heart-rate signals.

C. The other electronic component:

Includes some other component includes, Nokia 5110 LCD screen to display the information such as heart rate or oxygen level directly to user. Two 4.7KΩ resistors and one 20 KΩ variable resistor, PCB board and wires. Figure 8 illustrated the circuit diagram of proposed system.

Figure 9 shows the proposed oximeter system diagram

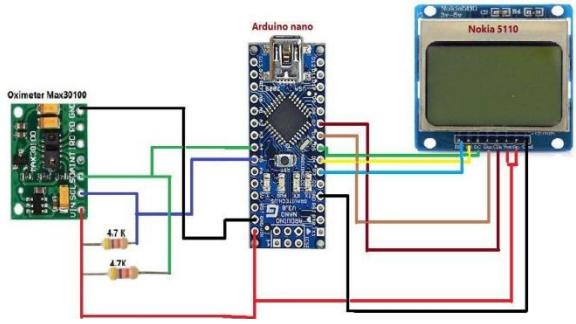

Figure 9. Circuit diagram of wearable proposed system

For programing the microcontroller, we used C++ language and used Arduino IDE to write code and upload it to the microcontroller. The program has been designing to be simple to use, the program offers many options includes, heart rate, oxygen level, temperature.

IV. EXPREMENTAL RESULTS

This section presents the experimental results of the proposed systems.

1- Results of Wearable Oximeter based Teensy 3.2 mini breakout MCU & MAX30100 Sensor

In this part we have tested the proposed system for different persons with different cases includes, healthy nonsmoker persons, smoker persons, relax persons and the worked person. Figure 10 shows the proposed oximeter in real operation.

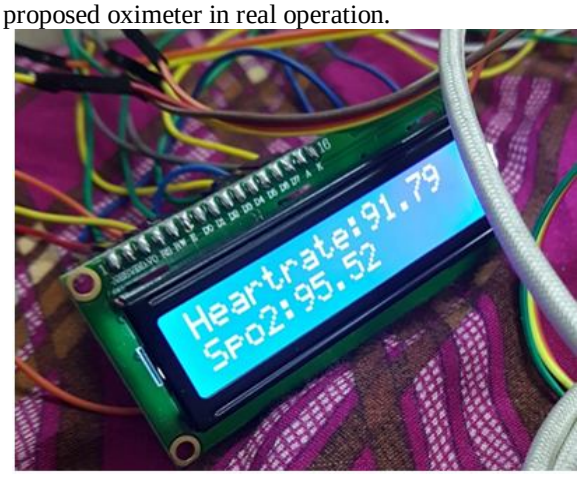

Figure 10. the proposed oximeter at real operating

The SPO2 results shows that the proposed system has an accurate result where it detects the smoker persons where there SPO2 is less than 90% while the nonsmokers has higher value over 95% and reach to 100% for healthy relax. The heart rate results show a non-stable result for every persons, we have compered result with smartphone oximeter results and it shows the readings nearest from that in mobile result, but it has some errors start after 30 second. These errors are due to 30100 sensors.

2- Results of PC Oximeter used a DAQ based Teensy 3.2 mini breakout MCU & MAX30100 Sensor

In this part we have tested the proposed system for different persons with different cases includes, healthy nonsmoker persons, smoker persons, relax persons and the worked person. Figure 11 shows the proposed oximeter in real operation.

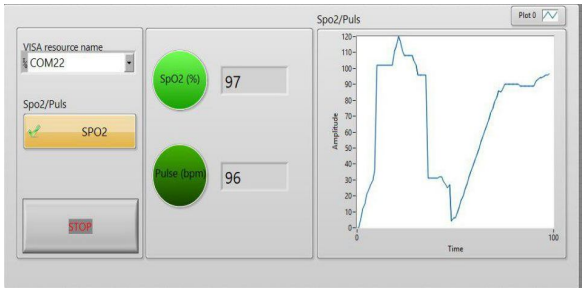

Figure 11. the proposed oximeter at real operating

The results show the Spo2 and heart rate reading are nearest from wearable system with an improvement in accuracy and the heart rate results more stable and have low errors.

3- Results of Wearable Oximeter based Teensy 3.2 mini breakout MCU & Proposed Sensor

In this part we have tested the proposed system for different persons with different cases includes, healthy nonsmoker persons, smoker persons, relax persons and the worked person. Figure 12 shows the proposed oximeter in real operation.

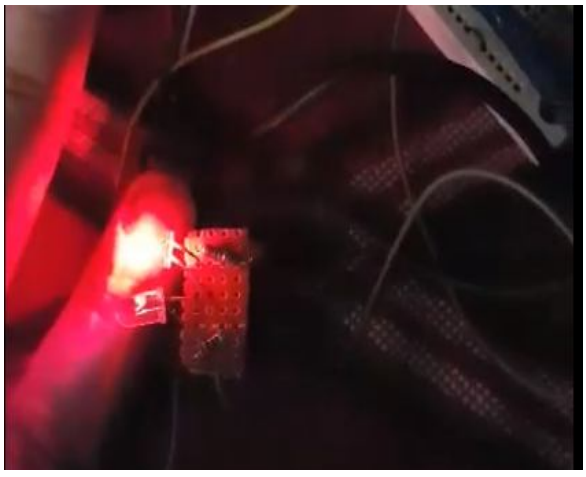

Figure 12. the proposed oximeter at real operating

The SPO2 results show that this method is more accurate than readings of MAX30100 and it give stable results.We have also tasted the heat rate of same persons in same condition, and the results shows that the readings are relatively same as in mAX30100 results

.

4- Results of Wearable Oximeter based Teensy 3.2 mini breakout MCU & Proposed Sensor

In this part we have tested we have tested the proposed system for different persons with different cases includes, healthy nonsmoker persons, smoker persons, relax persons and the worked person. Figure 10 shows the proposed oximeter in real operation.



Figure 10: the proposed oximeter at real operating

The results show that proposed oximeter used Arduino Nano based on theATmega328 is similar to operation of the MCU based 32bit ARM cortex (Teensy) form side of speed and operation and the SPO2 reading and heart rate reading are similar.

CONCLUSION

This work is aimed to design a prictical wearable oximeter device have a good accuracy that can be uses as an authorized device for monitoring the human health. Different techniques have been designed, constructed and tested for real operation. The test result can be sumrized to some main points:

1- The Oximeter used MCU based 32bit ARM cortex (such as Teensy) is similar to MCU based ATmega328 (such as Arduino family) and can get same accuracy from both. Also, the most sensors are compatible with both. The main difference is that the Arduino boards give more combability with large side of display screen while MCU based 32bit ARM cortex have limited combability and sometimes interfere with the work of oximeter sensors such as 30100.

2- SPO2 results from the proposed oximeter sensor is more accurate when compared with commercial oximeter sensor (MAX30100).

3- The pulse readings from pulse sensors not accurate and got many errors. This due to problems in sensors itself and to overcome this problem there is a need to take average pulse and neglect the non-stable reading until reach to stability then start counting.

REFERENCES

[1] 1-Kong, F.; Qin Y.; Yang Z.; Lin Z.A Wearable Pulse Oximeter. Rutgers University, 2015.

[2] 2-Lee, H.; Ko, H.; Lee, J.Reflectance pulse oximetry: Practical issues and limitations.ICT Express, Elsevier B.V., Vol.2, Issue 4, 2016, pp.195-198

[3] Garbhapu,V. V.;Gopalan,S.IoT Based Low Cost Single Sensor Node Remote HealthMonitoring System. The 7th International Conference on Current and Future Trends of Information andCommunication Technologies in Healthcare (ICTH 2017), Elsevier B.V, Procedia Computer Science 113, 2017,pp.408-415.

[4] Lee, YD.; Jung, SJ.; Seo, YS.; Chung, WY. Measurementof Motion Activity during Ambulatory Using Pulse Oximeter and Triaxial Accelerometer. Third International Conference on Convergence and Hybrid Information Technology, 2008.

[5] Ateş, G.;Polat, K. Measuring of Oxygen Saturation Using Pulse Oximeter Based on Fuzzy Logic. Department of Electrical and Electronics Engineering. AbantİzzetBaysal University. Turkey.

[6] 6. Mahamuni, P. Design & Implementation of Pulseoxymeter to Measures the Oxygen Saturation in Blood. International Journal on Recent Innovation in Instrumentation & Control Engineering, Vol.2, Issue 1, 2016, pp.1-8.

[7] 7.Bestbier, A. Monitoring core temperature, heart rate,respiratory rate and EEG of an infant through awireless ear probe. Master's Thesis, Department of Mechanical and MechatronicEngineering, Stellenbosch University, 2016.

[8] 8. Hieronymi, U.;Kramme, R.;Kronberg, H. Respiratory Monitoring and Pulse Oximetry. Springer Handbook of Medical Technology, Springer-Verlag Berlin Heidelberg, ISBN: 978-3-540-74658-4, 2011.

[9] 9. Saini, H.P.S. Simulink Based Modelling of a Pulse Oximeter. Master's Thesis, California State University, Northridge, 2013.

[10] 10. Pradeepraja, B.; Selvan, S.; Usharani, T. A Color - Coded Bracelet Modelling System toMeasure Heart Rate Pressure and Drug Level forSports Application. International Journal of Engineering Research & Technology (IJERT), Vol. 1 Issue 3, 2012.

[11] 11. MAX30100 datasheet. Pulse Oximeter and Heart-Rate Sensor IC for Wearable Health. Available from: https://www.maximintegrated.com/en/products/analog/sensors-and-sensor-interface/MAX30100.html.

★★★