STUDY ON NACELLE COVER SHAPE IMPROVEMENT OF 250 KW WIND TURBINE

[1]JI YUN KANG, [2]DONG-WON JUNG

[1]The Project Management Center Cultivating Smart Grid & Clean Energy Man power(CK-1),
[2]Department of Mechanical Engineering, Jeju National University
Email: [1]rkdwldbs7592@gmail.com, [2]jdwcheju@jejunu.ac.kr

Abstract - Nacelle cover is very important at the wind turbine because nacelle includes mechanical and electronical parts. So nacelle cover must be hard shape which can withstand the external force. This study is to determine shape of wind turbine about influence by wind. It has a CFD analysis using analysis software 'ansys workbench' to determine shape of the current nacelle cover of 250KW wind turbine, changed the shape of the nacelle cover, streamlined shape nacelle cover. When wind passes the nacelle cover, because of shape, this study finds out difference to influence of wind so determine shape of nacelle cover

Keywords - Wind Turbine , Nacelle Cover, Computational Fluid Dynamics(CFD)

I. INTRODUCTION

Now this time, due to using oil fuel caused environmental pollution.Nuclear energy hasa good electric power productivity but nuclear energy has a risk that lect out radioactivity and deal with nuclear waste. And according to United Nations Framework Convention on Climate Change(UNFCCC), countriesstudy how to reduce green-house gases. So world increase interest and study about eco-friendly energy. Wind energy of the eco-friendly energy relatively has good economics. Wind turbine is composed of rotor, nacelle and tower. Nacelle is important part that produce electric power so nacelle must be kept in bed weather. Because of this reason, in order to design shape which nacelle cover is less influenced by wind, study designs shape of nacelle cover using CFD analysis.
Nacelle model is currently using the nacelle cover of 250KW wind turbine, changed external shape of nacelle cover and streamlined shape of nacelle cover.

II. DETAILS EXPERIMENTAL

2.1. Nacelle cover model

For CFD analysis of nacelle cover, study designs current nacelle cover of 250KW wind turbine (Fig. 1), changed the shape of the nacelle cover (Fig. 2) and streamlined shape of nacelle cover (Fig. 3) using 3D modeling software. When wind blow, this study analysis that shape of nacelle cover take effect on wind so rotor and blade are excluded in 3D modeling part. Each nacelle cover design to solid model because this study find out the influence of external environment in accordance with the shape.
The name of each forward model as follows.

Table1: Type about each models

Type.1	Current shape of the nacelle cover
Type.2	Changed the shape of the nacelle cover
Type.3	Streamlined shape nacelle cover

This affected area sizes of models are shown in Table 2

Table 2: affected area sizes of models

	Area size
Type.1	10.1295m^2
Type.2	11.924m^2
Type.3	7.1825m^2

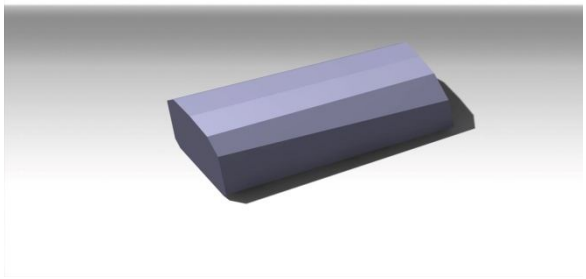

Fig.1. Current shape of the nacelle cover.; Type.1

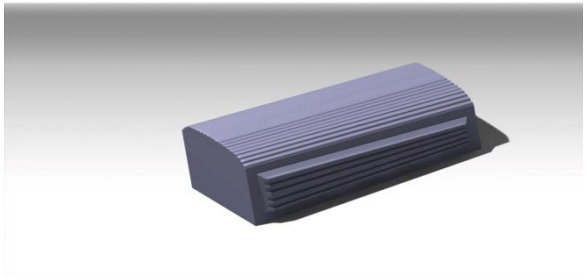

Fig.2. Changed the shape of the nacelle cover.; Type.2

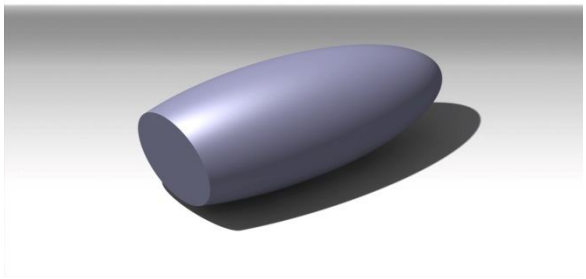

Fig.3. Streamlined shape nacelle cover.;Type.

2.2. CFD analysis

For this analysis the following assumptions.
- External condition of nacelle cover is air of 25℃.
- wind velocity is 25m/s.
- This velocity is the maximum velocity of wind turbine.
- Because of the velocity, Wind turbine stop operation.
- Due to blade and rotor, Nacelle is less influenced by wind blowing from the front
- So wind direction is side face
-Air pressure is 101.3kPa at outlet

Type of mesh decidetetra or hexa type. Table 3is number of node and element of nacell cover.

Table3 Number of Node and element of nacelle cover

	Node	Element
Type.1	128,907	523,521
Type.2	82,807	321,335
Type.3	17,010	75,487

III. RESULTS AND DISCUSSION

3.1. CFD anlysis result

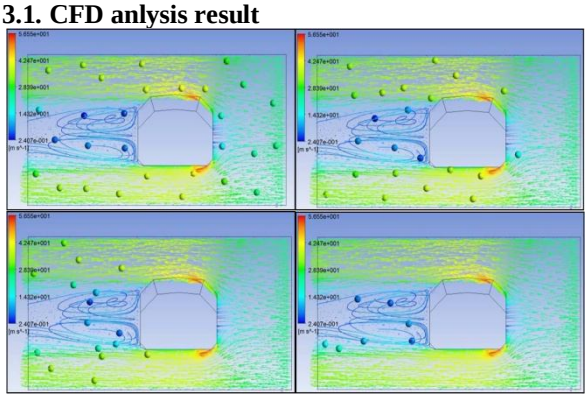

Fig.4. Velocity of wind on Type.1

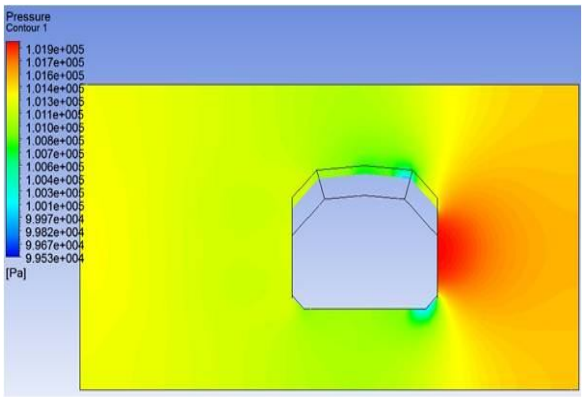

Fig.5. Pressure by wind on Type.1

When wind blow, type.1 is changing surrounding pressure and velocity. Force is converge on corner. Velocity and pressure of wind are 5.66m/s and 1.005Pa at side of the edge.

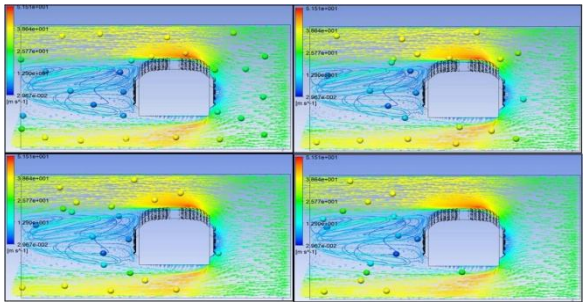

Fig.6. Velocity of wind on Type.2

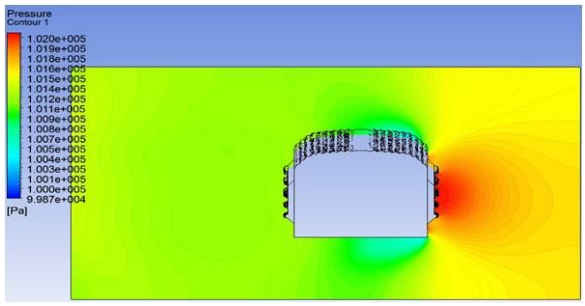

Fig.7. Pressure by wind on Type.2

Type.2 is similar with type.1 but area and size of velocity and pressure is descrease than Type.1. Velocity and pressure of wind is 5m/s and 1.004Pa at side of the edge.

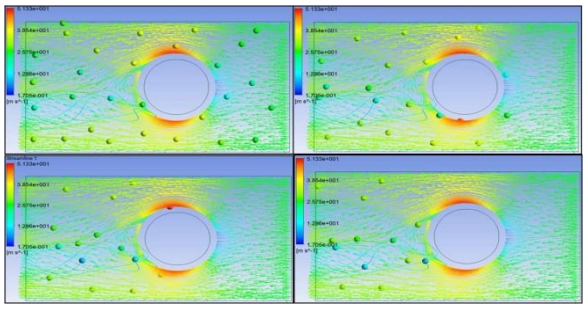

Fig.8. Velocity of wind on Type.3

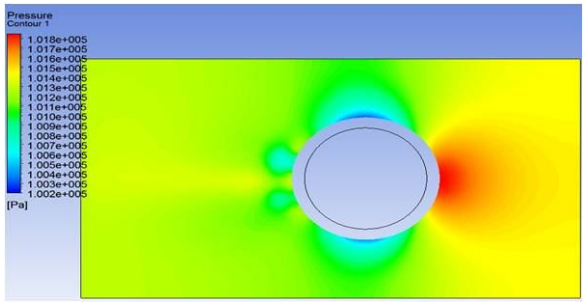

Fig.9. Pressure by wind on Type.3

This result different with previous two result of analysis. Pressure and velocity of size and area evenly spreads at top face of Type.3. Velocity and pressure of wind are 5.13m/s and 1.002Pa at top face.

CONCLUSIONS

Type.1, Type.2 and Type.3 of side face are similar to velocity and pressure but each shapes are diffrence in top of face. Force is converge on corner face to

current shape and changed shape at type.3. Force is evenly sread the whole of top face. According to result of analysis, Type.3 is ideal but Type.3 is lack area installed machine and electric part. Inside area of nacelle coverneeds an available space for repairing part. Because of this reason, nacelle must be large in order to increase area. For solving this problem, inside area must be large shape or use shape that combine type. 1 and type,3 or Type.2 and Type.3. For suggesting how to solve this problem, this Paper will need a study and research.

ACKNOWLEDGMENTS

This research was financially supported by The Project Management Center Cultivating Smart Grid & Clean Energy Manpower (CK-1), JNU.

REFERENCES

[1] Lee, J.Y., Choi, N.J., Yoon H.Y., Kim, I.S and Choi, Y,D., "Design and Flow Analysis on the 1kw-Class Horizontal Axis Wind Turbine Suitable for Islands Region," Korean Society for Fluid Machiney, pp.472-473, (2010).

[2] Kim, J. H., Kim, B. S., Nam, C. D. and Lee, Y. H., "A Study on Flow Analysis and an Esimate of Performance for HAWT by CFD," Journal of the Korean Society of Marine Engineers, Vol. 27, pp. 906-913, 2003.

[3] Kim, B.S. and Lee, Y.H.,"A Study on the Flow and the Aerodynamic Performance Analysis on the20kW HAWT by CFD,"Proceedings ofThe Fourth National Congress on Fluids Engineering,pp.1243-1246 ,(2006)

[4] Kim, B.S., Kim, J.H., Kim, Y.T., Nam, C.D and Lee, Y.H., "A Study on Evaluation fo the Application of a CFD Code to Flow Analysis and an Estimate of Performance for HAWT," The Korean Society of Mechanical Engieers Spring Conference, pp.2192-2197, (2003)

★★★