AUTOMATIC OBJECT TRACKING AND GRINDING CONTROL WITH A ROBOT MANIPULATOR

[1]JIN-SIANG SHAW, [2]KAI-HUNG SHIAO

[1,2]Institute of Mechatronic Engineering, Taipei Tech, Taipei, Taiwan
E-mail: [1]jshaw@ntut.edu.tw, [2]kerry60907@gmail.com

Abstract - In this paper, an automatic object tracking and grinding control system using a robot manipulator was developed. The system can perform a force-feedback grinding control of a still object and a moving object as well. The system first uses a 3D camera to detect the object and its depth information and then performs coordinate transformation to obtain the object coordinates in the robot arm coordinate system. Furthermore, we calculate the moving speed of the object and plan the grinding path. During the grinding process, a pressure sensor is employed and a Kalman filter is used for more stable pressure readings. Finally, we use a proportional controller to ensure a constant grinding force applied to the object by suitably moving the robot arm in the z direction. Experimental results validate effectiveness of the object tracking and grinding control system.

Index Terms - Automatic tracking, Grinding control, Robot arm.

I. INTRODUCTION

By global trend and industry development many developed countries face the problem of less young generation, which causing shortage of working population. In developed countries, companies which acquire high human resource can't afford high salary labor, but can't find low salary labor. They moved factories to developing country, but developing countries well become developed country soon after, and face the same problem too. So finding new method to replace working population is more important. Robots arm are widely used in the automated industry, because the robot arm can improve product quality and yield due to its accuracy and stability. To sum up, it is necessary to develop a new generation of intelligent robot arm. In this research, we aim to develop a grinding system with force control and computer vision. In the past, torque sensors were needed for robot arm curved surfaces grinding. However, torque sensors are high cost [1]. There are many researches about curved surface grinding. The grinding force is calculated by the angle between the object and the curved surface [2], but needs X-Y table to increase robot arm degree of freedom. In recent years, Huang et al. proposed a design of a flexible polishing force control flange [3] with measured the grinding force using air pressure. Although this study shows good measurement accuracy, they measured the force only in the grinding device. If height difference in z-axis is too large, this method cannot be used. The traditional way is based on a fixed path in the robot arm processing. However, changing the position of the object can fail the robot arm to complete its task. In this research, we integrated the grinding system with a 3D camera. Automatic object detection and tracking using the image recognition and force control can be found in [4] and [5]. In addition, most of the researches focus on processing of static objects. For examples, [6] performed peg-and-hole tasks by the visual servoing, and [7]-[9] grabbed static objects. Therefore, we integrate force control and object tracking for a grinding mechanism with a robot arm for smart manufacturing.

II. THE PROPOSED APPROACH

A. Hardware Configuration

First of all, a 6-axis robot arm TX60L from Staubli is connected to a laptop computer and C # programming language with EMGU development software is used. Grinding module having a camera on it is attached to the robot arm end effector, forming an eye-in-hand robot manipulator. Fig. 1 shows the experimental equipment configuration.

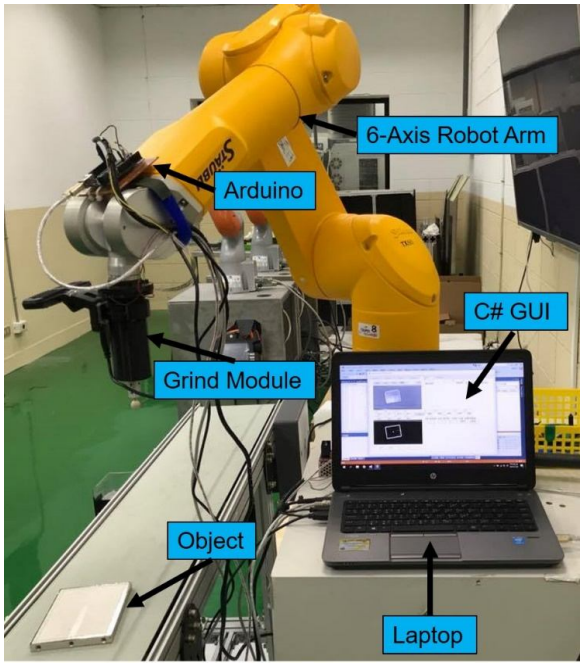

Fig.1. Experimental setup.

B. Design of Grinding Module

The grinding mechanism uses a DC motor coupled with a coupling to attach the grinding head. When

grinding, the pressure is transmitted to the force sensor using a spring. This force sensor is an FSR, which acts as a force sensing resistor in an electrical circuit. When the force sensor is unloaded, its resistance is very high. When a force is applied to the sensor, this resistance decreases. Change of resistance of the force sensor can be converted to the force value by an MCU Arduino. A Kalman filter is used for smoother force signals. Fig. 2 shows the schematic diagram of the grinding module.

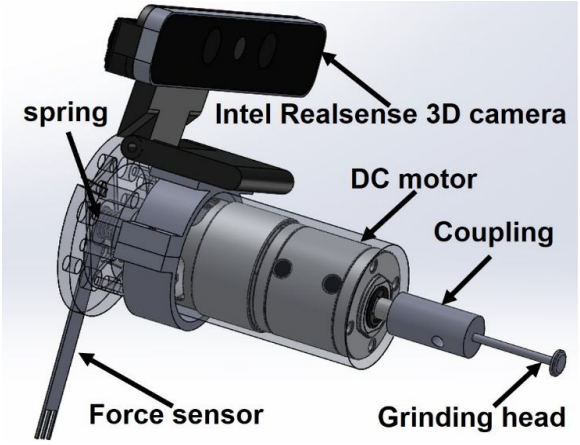

Fig.2. Grinding module

C. Kalman Filter

Because noises in the force sensor signal can cause system instability and reduce the grinding quality, a Kalman filter is employed to reduce these noises. The dynamics of a Kalman filter is as follows:

$$X(k|k-1) = A\,X(k-1|k-1) + B\,U(k) \quad (1)$$

$$P(k|k-1) = A\,P(k-1|k-1)\,A^T + Q \quad (2)$$

$$X(k|k) = X(k|k-1) + Kg(k)\,\left(Z(k) - H\,X(k|k-1)\right) \quad (3)$$

$$Kg(k) = P(k|k-1)\,H^T \,/\, \left(H\,P(k|k-1)\,H^T + R\right) \quad (4)$$

$$P(k|k) = (I - Kg(k)H)\,\mathrm{P}(k|k-1) \quad (5)$$

where $X\ (k \mid k-1)$ is the result of using the previous state prediction, $X\ (k-1 \mid k-1)$ is the result of the previous state optimality, and $U(k)$ the control input, which can be 0 if there is no control input.; $P\ (k \mid k-1)$ in (2) is a covariance corresponding to $X\ (k \mid k-1)$ and Q is the covariance of the system process. (1) and (2) are the first two equations in the Kalman filter for prediction of the system. Once we have the predictions of the current state, then we collect the measurements of the current state. Combining the predicted value and the measured value, we can get the optimal estimate $X\ (k \mid k)$ of the current state (k) in (3). Note that $Kg(k)$ is the Kalman Gain as in (4). In (5), we also update the covariance of $X\ (k \mid k)$ in the (k) state, that is, $P(k|k)$. Fig.3 shows the effect of the Kalman filter.

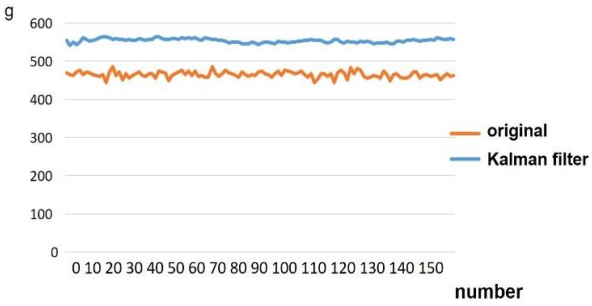

Fig.3. The result of a Kalman filter

D. Object Detection

To achieve automatic tracking, a 3D camera is used to provide visual information about objects. Next, by transforming depth values to pixel intensities and projecting into the image, we can know the depth information of each point on the camera image. In addition, by using Canny edge detection and contour formation, the coordinates of the object in the image and the distance between the object and the camera can be obtained. Fig. 4 shows the image recognition results. To calculate coordinates of the object in the inertial coordinates system, a camera projection model is shown in Fig. 5, where pixel length and space length is related as follows:

$$\mathrm{X} \times \tan(29.6^\circ) \div 320 = \mathrm{mm/pixel} \quad (6)$$

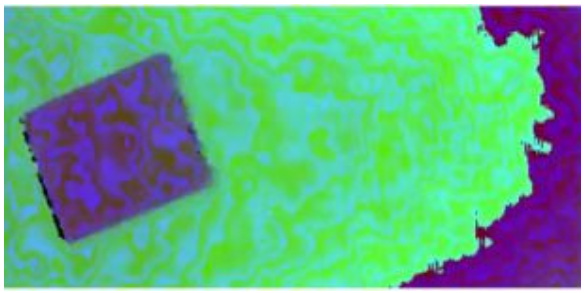

(a)

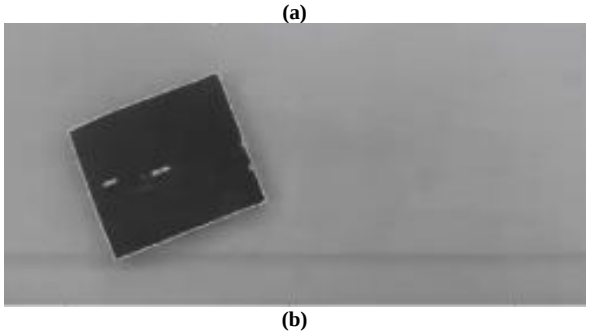

(b)

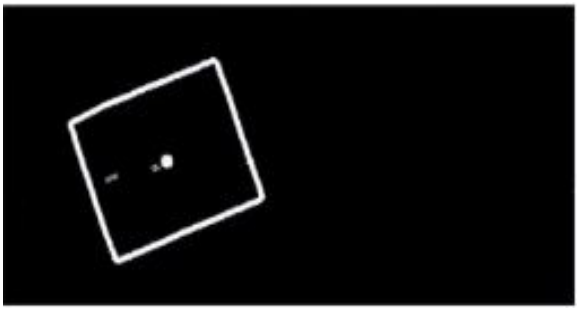

(c)

Fig.4. Object detection (a) transforming depth values to pixel intensities; (b) original image; (c) after image processing.

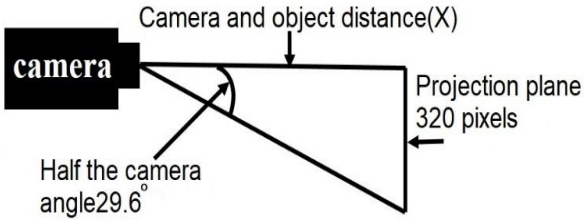

Fig. 5. Camera projection model.

E. Coordinate Transformation of Robot Arm

First, we define the position and orientation of each joint coordinate system. Fig. 6 shows each joint coordinate system for the robot arm. Using forward kinematics and the Denavit-Hartenberg convention to calculate the DH table, we can know each of coordinate transformation matrix from the previous coordinate system to the next coordinate system on each joint of robot. Table 1 shows the DH parameters. The coordinate transformation from inertial coordinate to end effectors coordinate is given in (7).

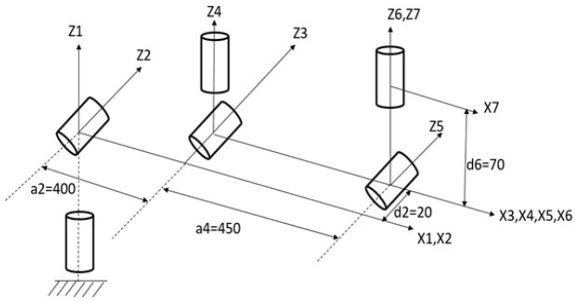

Fig. 6. Position of each joint coordinate system.

	θ	ai	di	α
1	θ1	0	0	-90
2	Θ2+90	400	20	0
3	θ3	0	0	90
4	θ4	450	0	-90
5	Θ5-90	0	0	90
6	θ6	0	70	0

Table 1. DH parameters.

$$T_6^0 = A_1^0 A_2^1 A_3^2 A_4^3 A_5^4 A_6^5 \qquad (7)$$

F. Visual Servo

After we obtain the object coordinates, we can calculate the object moving speed and predict the starting point for grinding. Using speed control to move the grinding head to 10mm over the starting point, then the grinding head approaches to the starting point and begins to move at a constant speed relative to the object in the XY plane and the Z direction starts to move downward for grinding. Fig. 7 shows the actual movements of the grinding head position.



(a)



(b)

Fig. 7 Movements of the grinding head (a) over the starting point 10mm; (b) touching the starting point;

G. Grinding Path Planning

Although a 3D camera can provide 3D information about objects, the depth value will not be accurate enough for grinding. Therefore, after the grinding head touches the object, the robot arm will automatically generate the Z-axis height by using the feedback of the force value: if grinding force is too large, the grinding head will automatically move upward; when the grinding force is too small, it will automatically move downwards. Consequently, a proportional controller in C # program is included in (8). Fig. 8 shows the programming flow chart.

$$Z_n = Z_{n-1} + \mathrm{K}_p * \frac{\text{error}}{\text{Target}} \qquad (8)$$

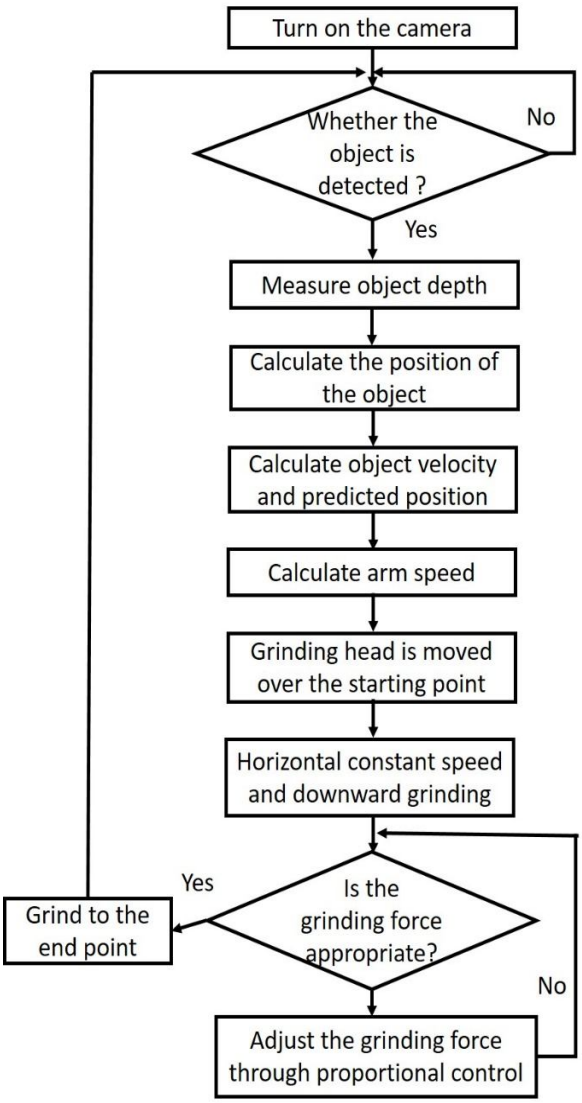

Fig. 8 Flow chart for grinding process.

H. Blending Move

The robot arm TX60L only has the point-to-point movement instruction. Consecutive point-to-point commands will have the problem of step-by-step movements, and cause the robot to lose the moving objects. By using the blending function of the Staubli controller [9] can make the route smoother while moving.

Fig. 9 shows the robot arm pick-and-place task path. The robot arm changes the direction of movement and has a noticeable pause, when it reaches the pDepart point and the pAppro point. However, the main movement is point-to-point movement, so we don't need to accurately control at the pDepart and pAppro points, because it is desirable to move robot arm as quickly as possible. The blending function can change the curvature of the motion path. In the blending function, there are two parameters which need to be set: the leave and reach. In Fig. 9, the leave is the distance from the start blending to the target point, and the reach is the distance from the target point to the end blending point. After setting these two parameters, it can be seen from Fig. 9 that the robot does not pass through the pDepart point and the pAppro point. This trajectory will be faster and smoother than the original point-to-point trajectory. Giving the next blending move command before the robot arm finishes moving, the robot will keep moving to the next target blending move without pause.

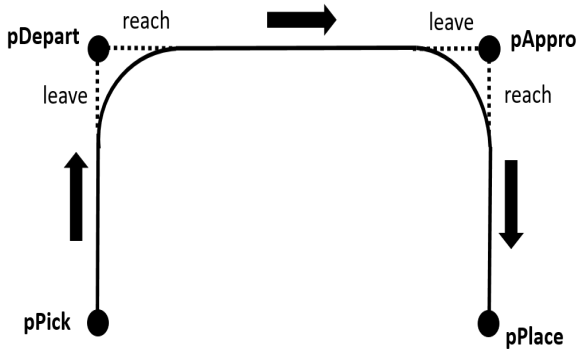

Fig. 9 Pick and place trajectory (with blending)

II. Experimental Results

A. Static Object Grinding

In this research, we can grind curved surface by using the force feedback grinding system. In the past, a curved surface grinding path needs to be set in advance. However, this research automatically generates the grinding path and saves grinding preparation. We prepared a curved surface object and with white stain on the surface. We use the system for grinding tests. The system can achieve good curved surface grinding results as shown in Fig. 10.



(a)

(b)

Fig. 10 curved surface grinding (a) before grinding; (b) after grinding

I. Moving Object Grinding

The system proposed in the paper can grind moving objects to save grinding time, by using the automatic tracking and force feedback grinding methods. This system can also automatically grind objects of different sizes and moving speeds. This research saves the human resources and improves the processing quality more efficiently. The system offers customized meta

lworking services. We prepared three different sizes of objects and with white stains on the surface. We put these objects on the conveyor for grinding. The system can achieve good surface grinding results as shown in Fig. 12.

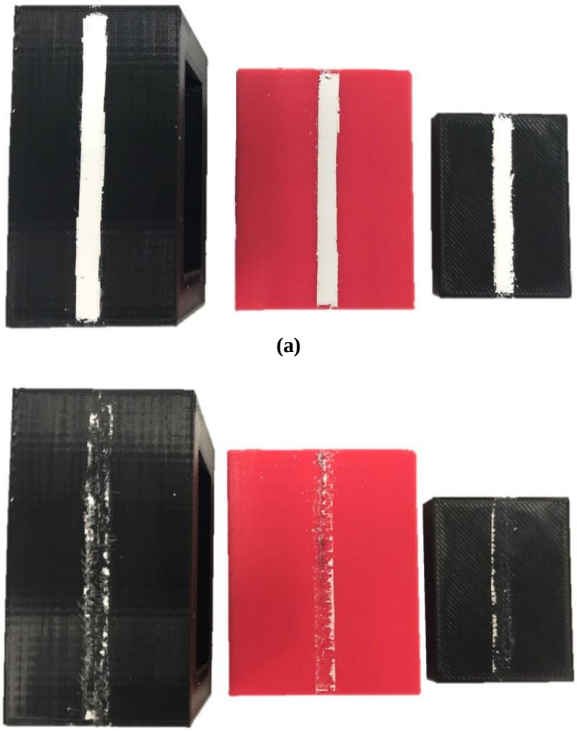

(a)

(b)

Fig.12. Moving object grinding (a) before grinding; (b) after grinding

CONCLUSIONS

In this paper, we combine Canny algorithm, contour recognition method and visual servoing for tracking moving object with an eye-in-hand robot arm. In order to make the grinding closer to the surface, we convert grinding force and displacement by force feedback and proportional controller. Though the robot arm only uses point-to-point movement, but the robot arm still moves smoothly with blending function.

In future works, all grinding data the robot arm performs grinding to the moving objects by the automatic grinding system will be collected. By these big data, a better and efficient grinding method is to be developed.

ACKNOWLEDGMENTS

This paper is partially supported by the Ministry of Science and Technology, Taiwan, under grant no. MOST 106-2221-E-027-129.

REFERENCES

[1] Tsai Ming-June, “A Study on Automatic Die & Mold Polishing System Using Machine Vision and Feature Based Model Reconstruction,” National Science Council project, National Cheng Kung University, Taiwan, 1998.

[2] Y. J. Jan, “Robot-Assisted Grinding System on Specimens with Curved Surfaces,” Tamkang University. Taiwan,Aug ,2000.

[3] Ting Huang, Chuang Li, Zhenhua Wang,Lining Sun,Guodong Chen,“Design of a Flexible Polishing Force Control Flange”,IEEE International Workshop on Advanced Robotics and its Social Impacts,July 8-10,2016.

[4] J. Shaw and Vipul Dubey, “Design of Servo Actuated Robotic Gripper Using Force Control for Range of Objects,” International Conference on Advanced Robotics and Intelligent Systems, Taipei, Taiwan, Aug. 31-Sept. 2, 2016.

[5] J. Shaw, Jin-mei Yeh. “Development of Intelligent Robot Gripper Equipped with Force Sensor and Vision system,” National Taipei University of technology, Taiwan, July.,2015.

[6] Shouren Huang, Yuji Yamakawa, Taku Senoo, Masatoshi Ishikawa, “Realizing Peg-and-Hole Alignment with One Eye-in-Hand High-Speed Camera,” IEEE/ASME International Conference on Advanced Intelligent Mechatronics (AIM), July 9-12,2013.

[7] Kai-Tai Song, Chung-Hsien Yeh, “Grasping Control of a Mobile Manipulator,” National Chiao Tung University, Taiwan, Aug,2006.

[8] Chi-Ying Lin, Chao-shin Hsu,“Design and Implementation of Uncalibrated Visual Servo System,” , National Taiwan University of Science and Technology,Taiwan,July ,2012.

[9] J. Shaw, Wen-Lin Chi, “Automatic Tracking of Moving Object with Eye-in-Hand Robot Manipulator,” International Journal of Mechanical and Production Engineering (IJMPE), pp. 129-134, Volume-5, Issue-3, May 2017.

★★★